Column casings

An information guide for specifiers

Includes download links to BIM objects, DWG files and project case studies

contour

Contents

1. Why specify Contour column casings?

2. Column casing profiles

3. PPC aluminium casings
   - Product datasheets
   - BIM objects & DWG files

4. Brushed aluminium casings
   - Product datasheets
   - BIM objects & DWG files

5. Stainless steel casings
   - Product datasheets
   - BIM objects & DWG files

6. Rimex casings
   - Product datasheets
   - BIM objects & DWG files

7. Bespoke options

8. BioCote® anti-microbial protection

9. Case studies

10. Space Oasis

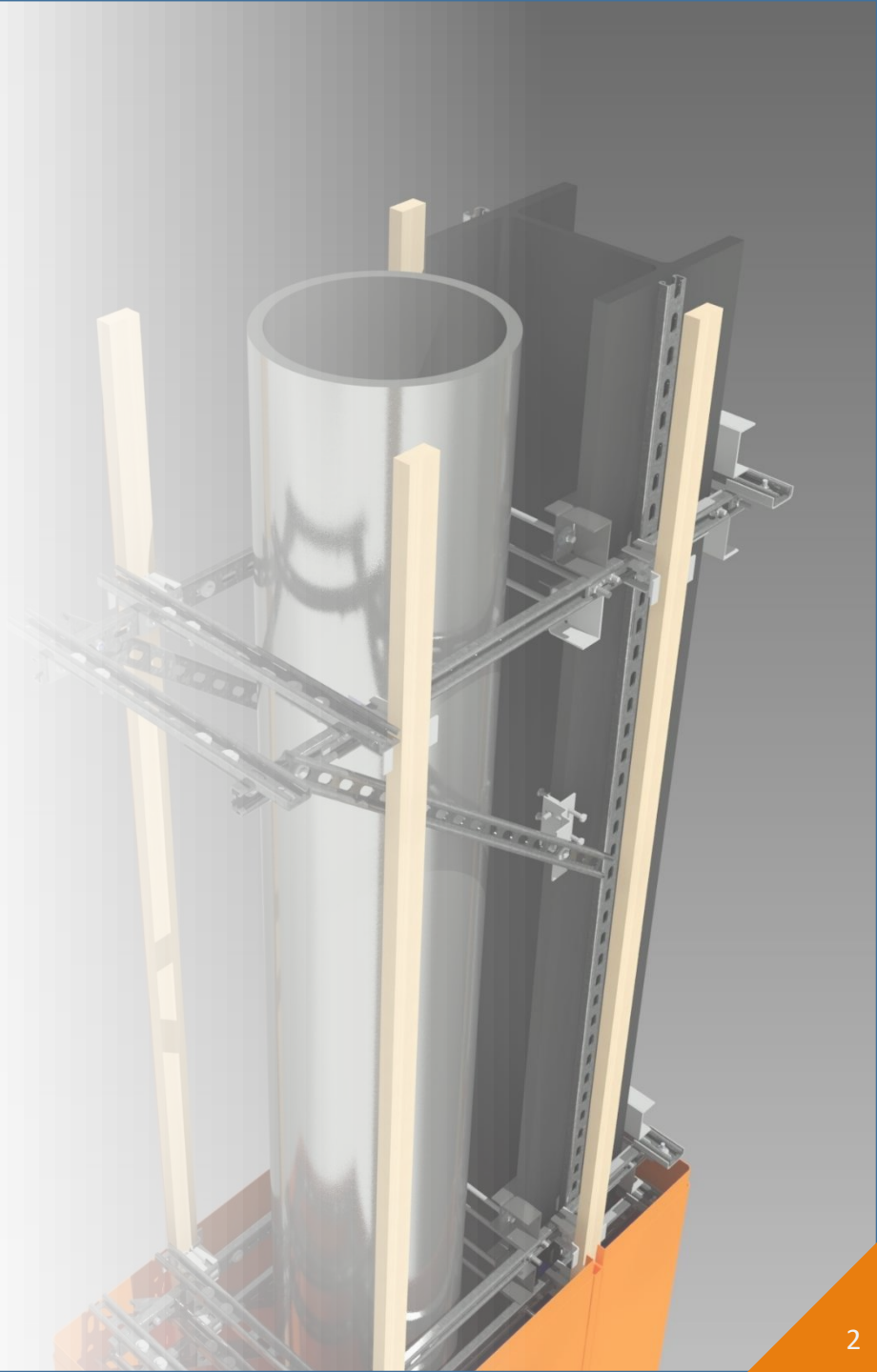

Why specify Contour column casings?

We combine design-led concepts with advanced in-house manufacturing technology to provide architects, designers and contractors with one of the UK's most comprehensive ranges of column casings.

Our column casings can deliver whatever is required for a project; whether it's a striking visual statement or a functional feature that disappears effortlessly into an overall building aesthetic.

Contour column casings are generally manufactured from aluminium or stainless steel, however we can work with other metals.

Metal casings are available in a variety of surface finishes including:

- Polyester Powder Coating (PPC)
- Brushed
- Anodized
- Rimex* - a finish developed to provide vibrant finishes for design-led projects.

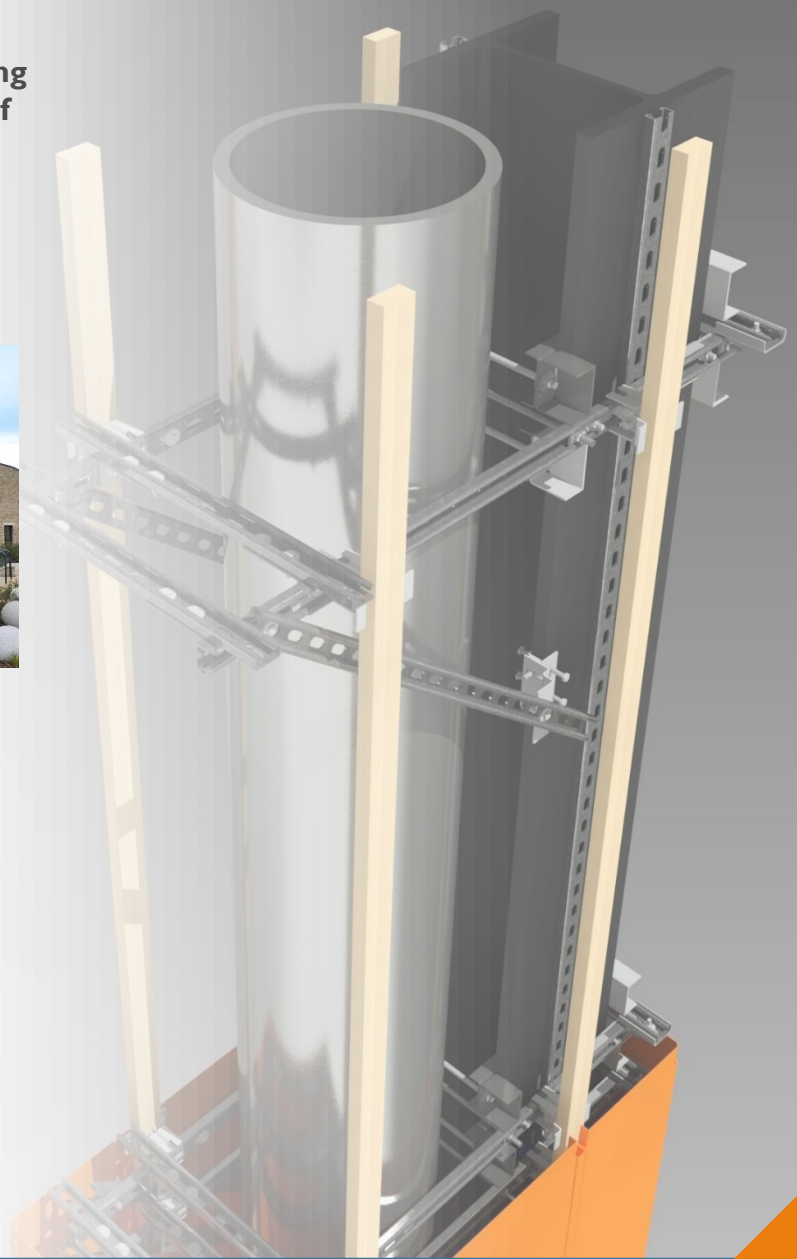

*Rimex is a trade mark of Rimex Metals (UK) Ltd.

Why specify Contour column casings?

A complete design to installation service available

We can provide a total end-to-end service supplied by skilled engineering designers, technicians and installers using advanced CAD/CAM facilities and installation methods. All our column casing design and manufacture is undertaken in-house* ensuring that speed of turnaround, quality assurance and cost control are all optimised. Contour has considerable experience in value engineering building schemes where budgets are constrained.

Free of charge site surveys

We undertake all site surveys free of charge as part of a comprehensive service. Our surveyors, all of whom have installation experience, will identify the correct size and quantities of products required, and will take note of any special requirements, such as cut-outs. Contour's surveyors can work with you to suggest innovative and alternative design modifications on your original concepts, helping you reduce installation time and costs.

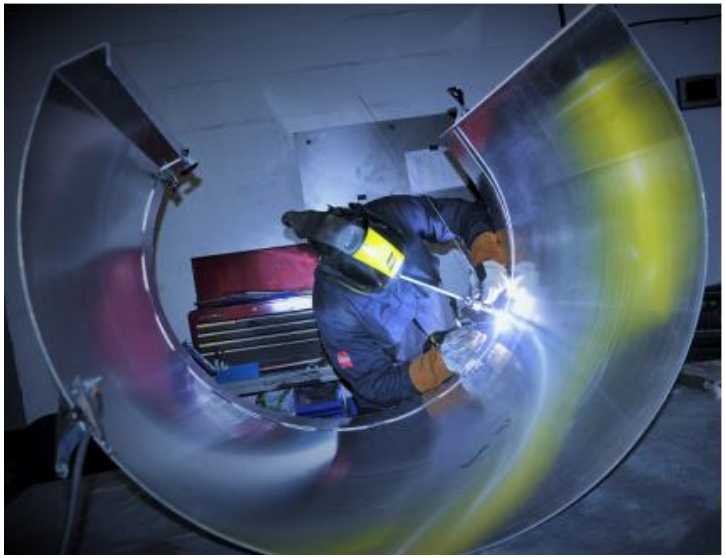

*Excludes application of PPC finishes.

Why specify Contour column casings?

Access to BIM and DWG files

Contour were the first UK company to offer an extensive range of metal column casings as BIM objects. These are all available for fast and free of charge download from our website. In addition DWG files are available for all our column casings ranges and can also be downloaded. **Links to all Contour's column casing BIM and DWG files can be found in this document.**

BioCote® anti-microbial protection for hygiene critical environments

Contour has exclusive UK rights for the use of BioCote protection in the finish of its column casings. BioCote is a patented world leading anti-microbial agent that is proven to inhibit the growth of harmful bacteria including MRSA and E-Coli. This makes our column casings ideal for specification and installation in hygiene critical environments such healthcare, food processing and pharmaceutical manufacturing sectors.

Product guarantees for total peace of mind

Contour can provide guarantees of up to 25 years for polyester powder coating finishes applied to its column casings. Terms and conditions apply.

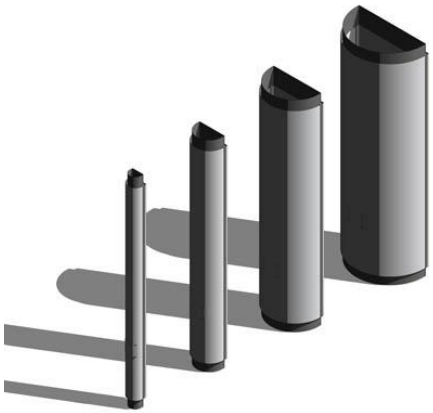

Column casing profiles

Contour column casings are available in 6 basic ‘template’ profiles which can each be tailored to a virtually limitless degree.

All profiles are available in either aluminium or steel.

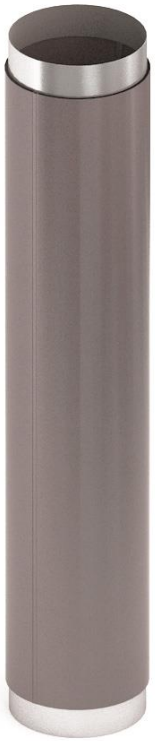

Circle

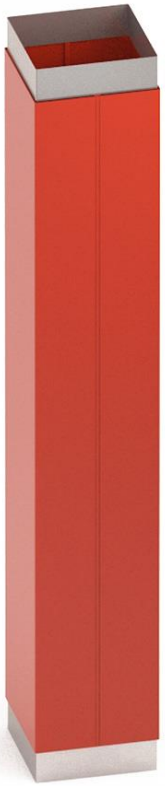

Square

Rectangle

Lozenge

Bullet

Ellipse

PPC (Polyester Powder Coating) aluminium casings

Overview
Contour's PPC aluminium column casings range is the market leading solution for retail environments, commercial offices, education, healthcare and other high traffic areas.

Our PPC casings are a fully sustainable solution that offer an almost endless range of shapes and sizes, in virtually any RAL or BS colour

Technical specifications:

Manufacture
Manufactured from lightweight aluminium, this robust column casing solution has a 3mm metal skin.

Supplied in sections of up to 3m, an additional internal support structure can be designed for large diameter column casing configurations consisting of more than 2 sections.

The jointing arrangement is a 28mm recess which can be left open or infilled with either a feature gasket or metal to match the casing finish.

All Contour aluminium used conforms to BS EN 485/515/573,
grade 1050A-H14/4015-H12.

PPC (Polyester Powder Coating) aluminium casings

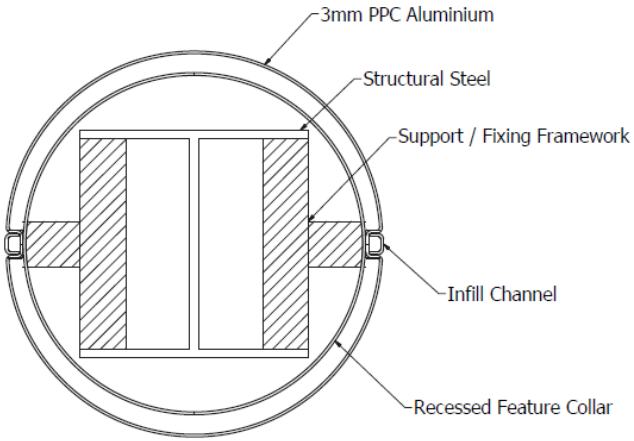

Technical specifications:

Application
Equally suited to both interior and exterior locations, the Contour PPC Aluminium column casing system is available in a range of standard and bespoke shapes and sizes, to meet precise project and installation needs.

Finish options
Polyester powder coated to BS 6496 / BS EN 12206 and finished in any RAL or BS colour. A powder coating guarantee of up to 25 years is available.
BioCote® antimicrobial technology can be incorporated into the paintwork, ideal for healthcare and food processing applications. Special finishes such as Syntha Pulvin are available

Fire performance
The Contour PPC column casing range is fabricated from ferrous and non-ferrous metals; they are non-combustible and achieve a Class 'O' spread of flame to BS 476-4 standard.

Key characteristics
- Flexible finish
- Robust construction
- Bespoke options

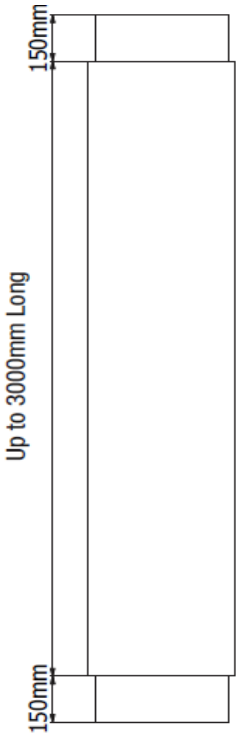

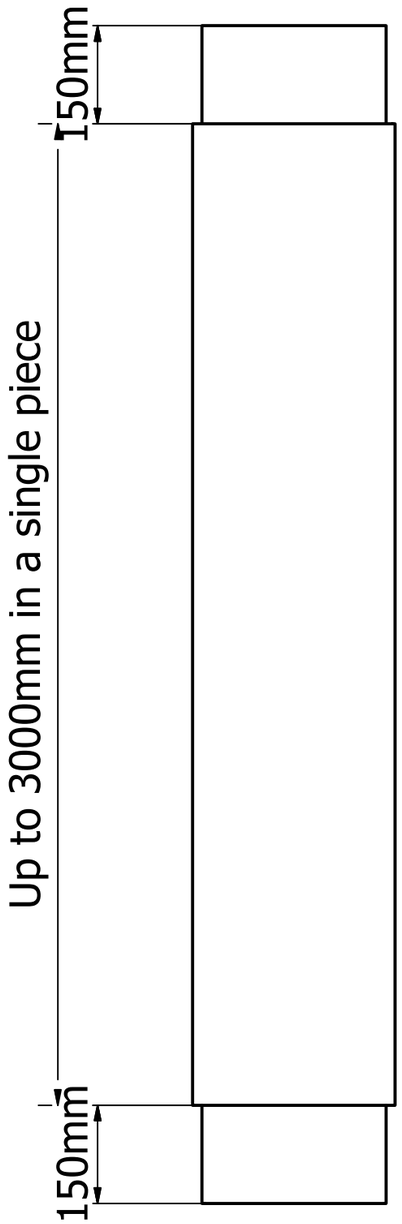

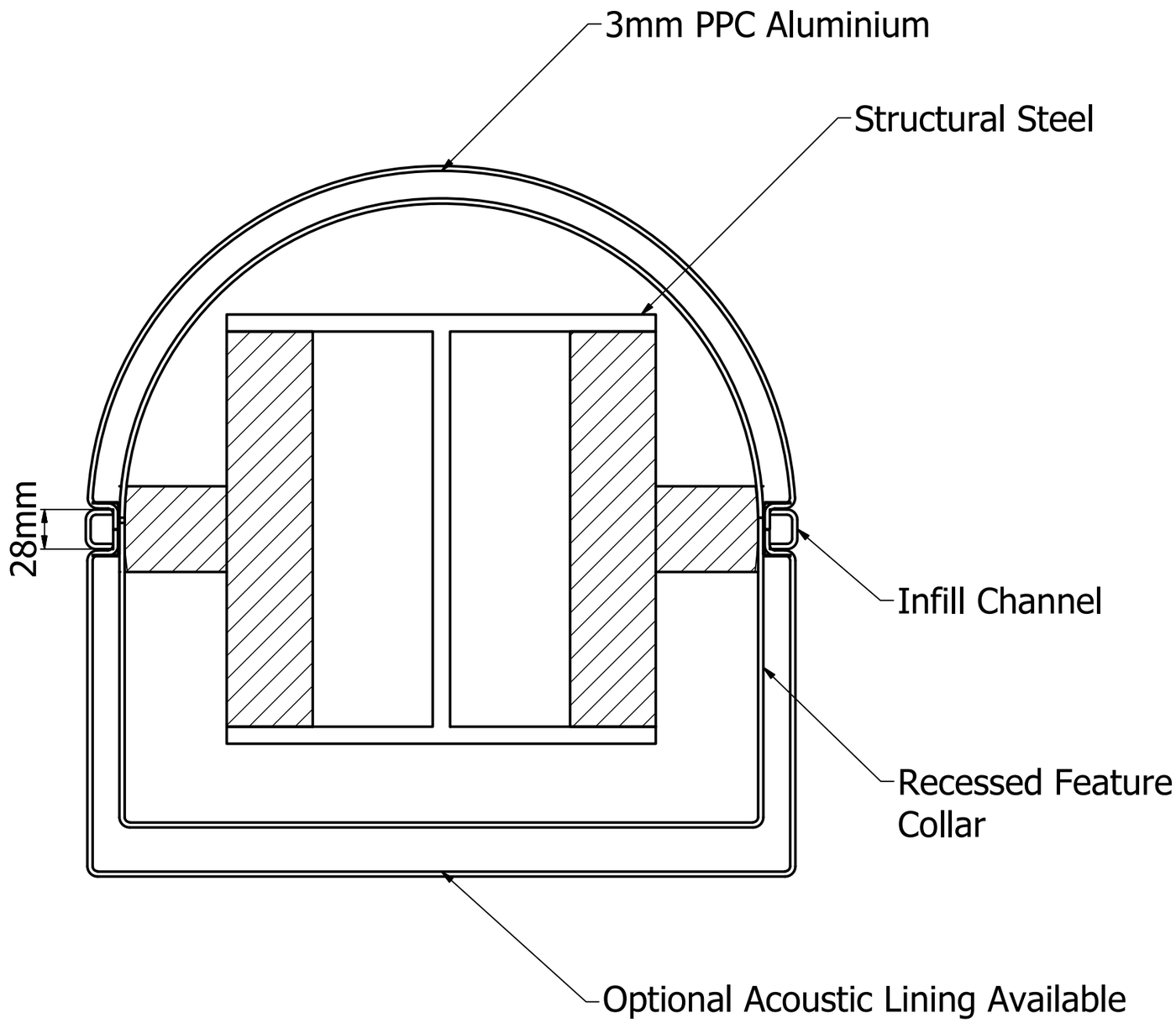

Product Reference: Contour PPC Aluminium Bullet Column Casing.

Manufacturer: Contour Casings, Stafford Park 15 Telford, TF3 3BB

Material Specification: Fabricated from pressed Aluminium alloy sheet to BS EN 485/515/573, grade 1050A-H14/4015-H12. Minimum thickness 3mm.

Size: Up to 3000mm in a single piece, larger bespoke heights available through vertical stacking. External diameter 250 - 1000mm, larger bespoke diameters available though multiple sections.

Shape: Circular, Square, Rectangular, Lozenge, Bullet, Elipse. Bespoke configurations available.

Finish: Mill finish or Polyester Powder Coated in any RAL or BS colour. Guarantee of up to 25 years provided.

Joint Detail: Shadow Gap.

Accessories: Optional head / skirting collars, acoustic lining, thermal foam, access panel, decorative outer rings, male & female assembly joints, integrated signage, DDA options.

Contour Casings
Stafford Park 15
Telford
TF3 3BB
Tel: 01952 290498
Email: sales@contourcasings.co.uk
Web: www.contourcasings.co.uk

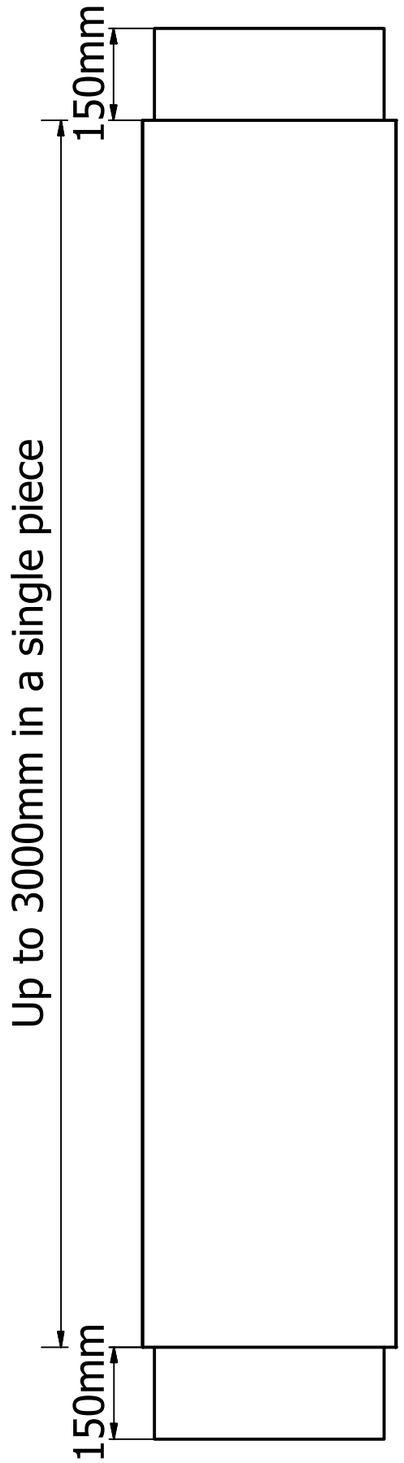

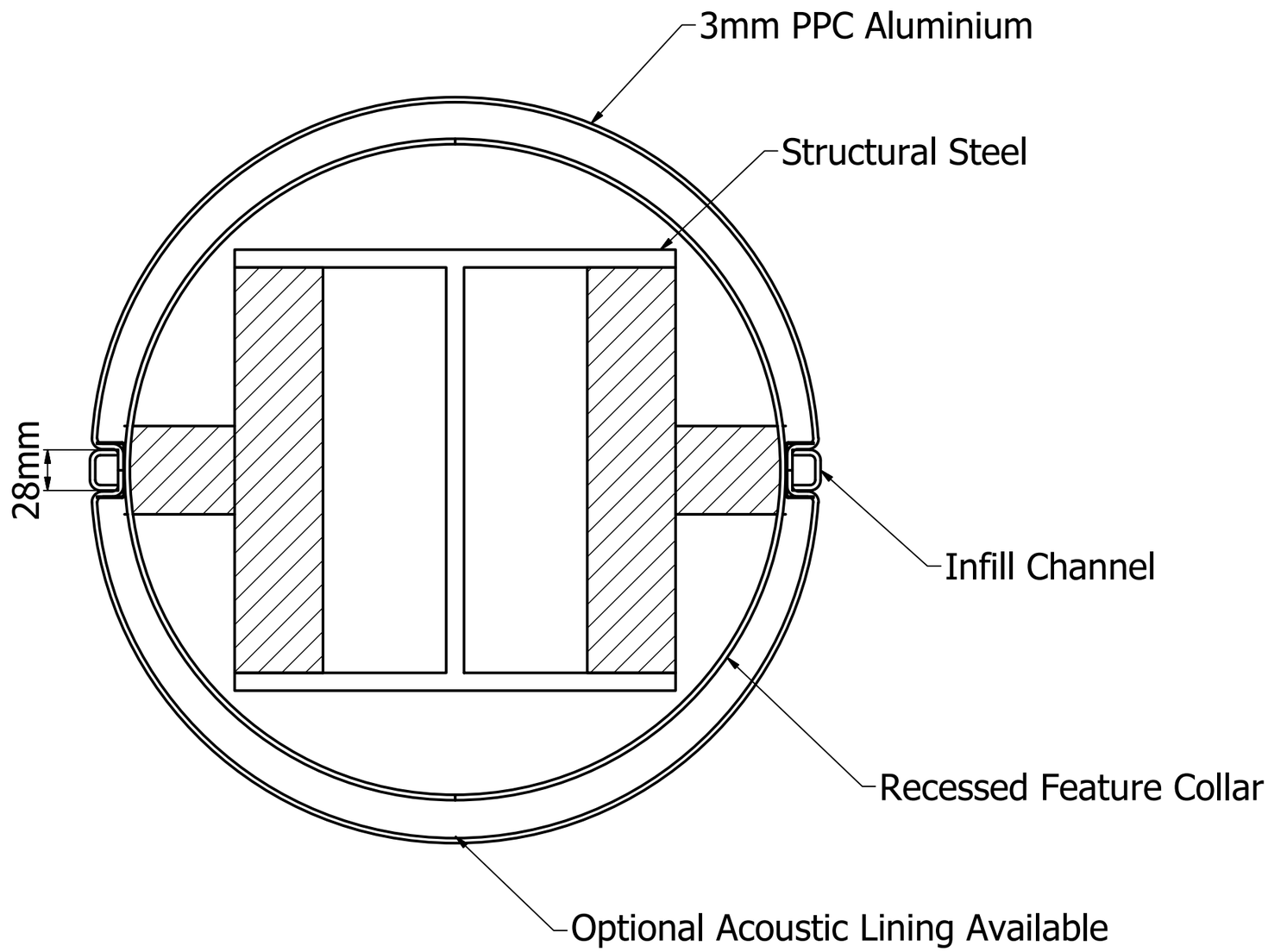

Product Reference: Contour PPC Aluminium Circular or Ellipse Column Casing.

Manufacturer: Contour Casings, Stafford Park 15 Telford, TF3 3BB

Material Specification: Fabricated from pressed Aluminium alloy sheet to BS EN 485/515/573, grade 1050A-H14/4015-H12. Minimum thickness 3mm.

Size: Up to 3000mm in a single piece, larger bespoke heights available through vertical stacking. External diameter 250 - 1000mm, larger bespoke diameters available though multiple sections.

Shape: Circular, Square, Rectangular, Lozenge, Bullet, Elipse. Bespoke configurations available.

Finish: Mill finish or Polyester Powder Coated in any RAL or BS colour. Guarantee of up to 25 years provided.

Joint Detail: Shadow Gap.

Accessories: Optional head / skirting collars, acoustic lining, thermal foam, access panel, decorative outer rings, male & female assembly joints, integrated signage, DDA options.

Contour Casings
Stafford Park 15
Telford
TF3 3BB
Tel: 01952 290498
Email: sales@contourcasings.co.uk
Web: www.contourcasings.co.uk

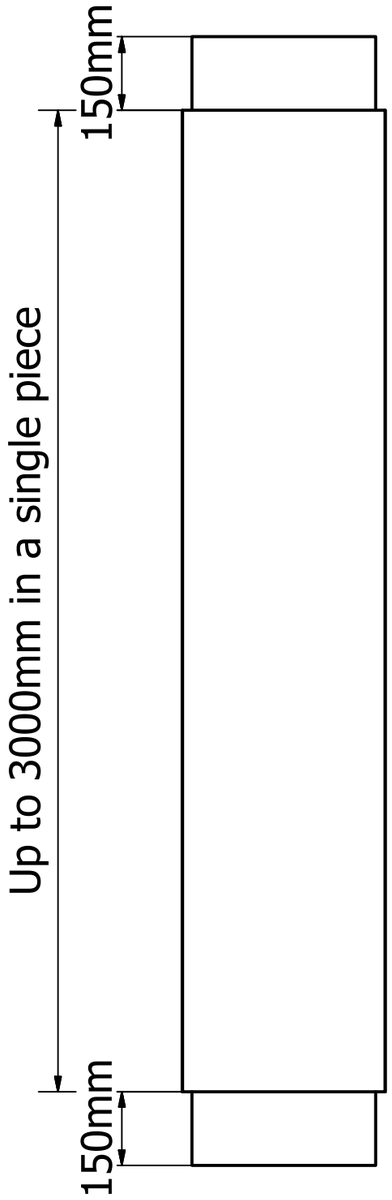

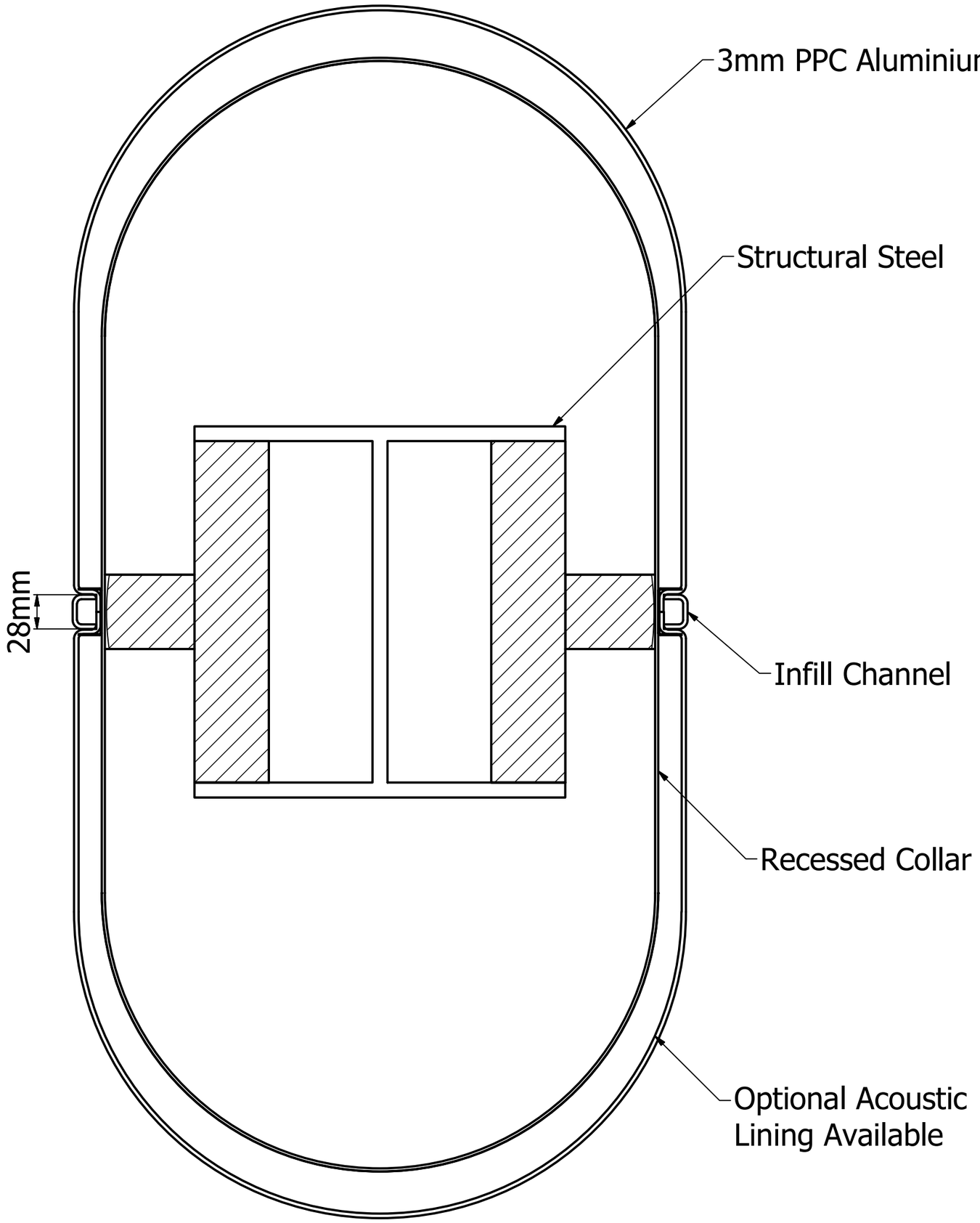

3mm PPC Aluminium

Structural Steel

Infill Channel

Recessed Collar

Optional Acoustic Lining Available

Product Reference: Contour PPC Aluminium Lozenge Column Casing.

Manufacturer: Contour Casings,
Stafford Park 15
Telford, TF3 3BB

Material Specification: Fabricated from pressed Aluminium alloy sheet to BS EN 485/515/573, grade 1050A-H14/4015-H12. Minimum thickness 3mm.

Size: Up to 3000mm in a single piece, larger bespoke heights available through vertical stacking. External diameter 250 - 1000mm, larger bespoke diameters available though multiple sections.

Shape: Circular, Square, Rectangular, Lozenge, Bullet, Elipse. Bespoke configurations available.

Finish: Mill finish or Polyester Powder Coated in any RAL or BS colour. Guarantee of up to 25 years provided.

Joint Detail: Shadow Gap.

Accessories: Optional head / skirting collars, acoustic lining, thermal foam, access panel, decorative outer rings, male & female assembly joints, integrated signage, DDA options.

Contour Casings
Stafford Park 15
Telford
TF3 3BB
Tel: 01952 290498
Email: sales@contourcasings.co.uk
Web: www.contourcasings.co.uk

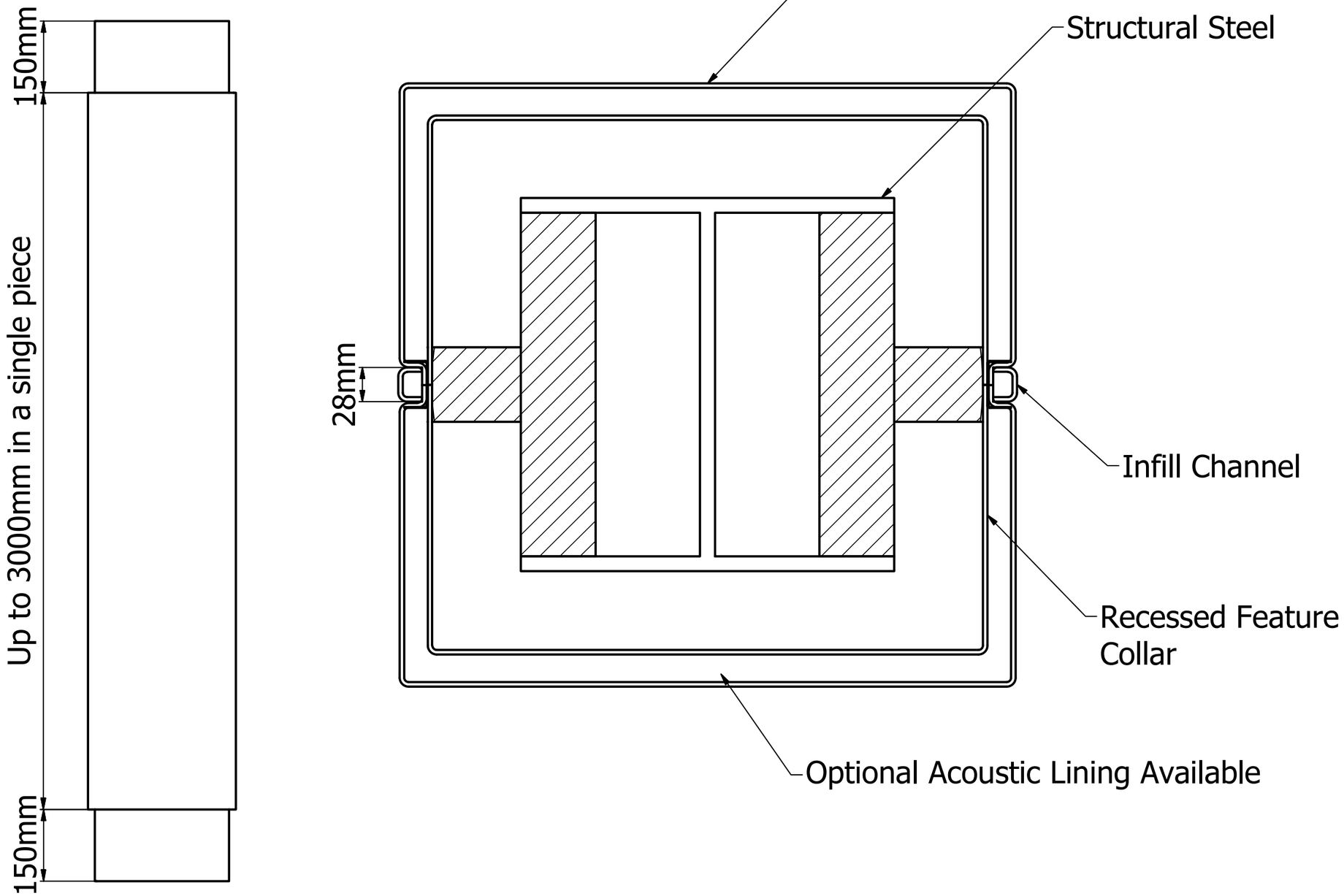

Product Reference: Contour PPC Aluminium Square Column Casing.

Manufacturer: Contour Casings,
Stafford Park 15
Telford, TF3 3BB

Material Specification: Fabricated from pressed Aluminium alloy sheet to BS EN 485/515/573, grade 1050A-H14/4015-H12. Minimum thickness 3mm.

Size: Up to 3000mm in a single piece, larger bespoke heights available through vertical stacking. External diameter 250 - 1000mm, larger bespoke diameters available though multiple sections.

Shape: Circular, Square, Rectangular, Lozenge, Bullet, Elipse. Bespoke configurations available.

Finish: Mill finish or Polyester Powder Coated in any RAL or BS colour. Guarantee of up to 25 years provided.

Joint Detail: Shadow Gap.

Accessories: Optional head / skirting collars, acoustic lining, thermal foam, access panel, decorative outer rings, male & female assembly joints, integrated signage, DDA options.

Contour Casings
Stafford Park 15
Telford
TF3 3BB
Tel: 01952 290498
Email: sales@contourcasings.co.uk
Web: www.contourcasings.co.uk

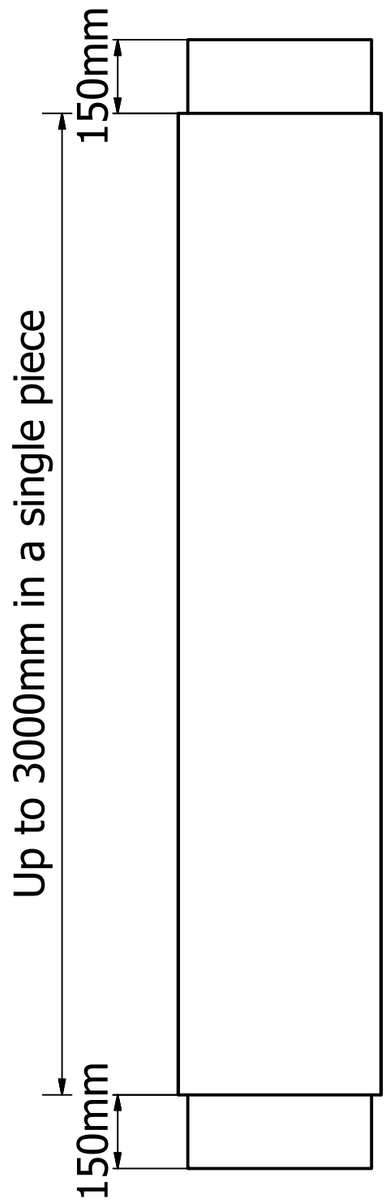

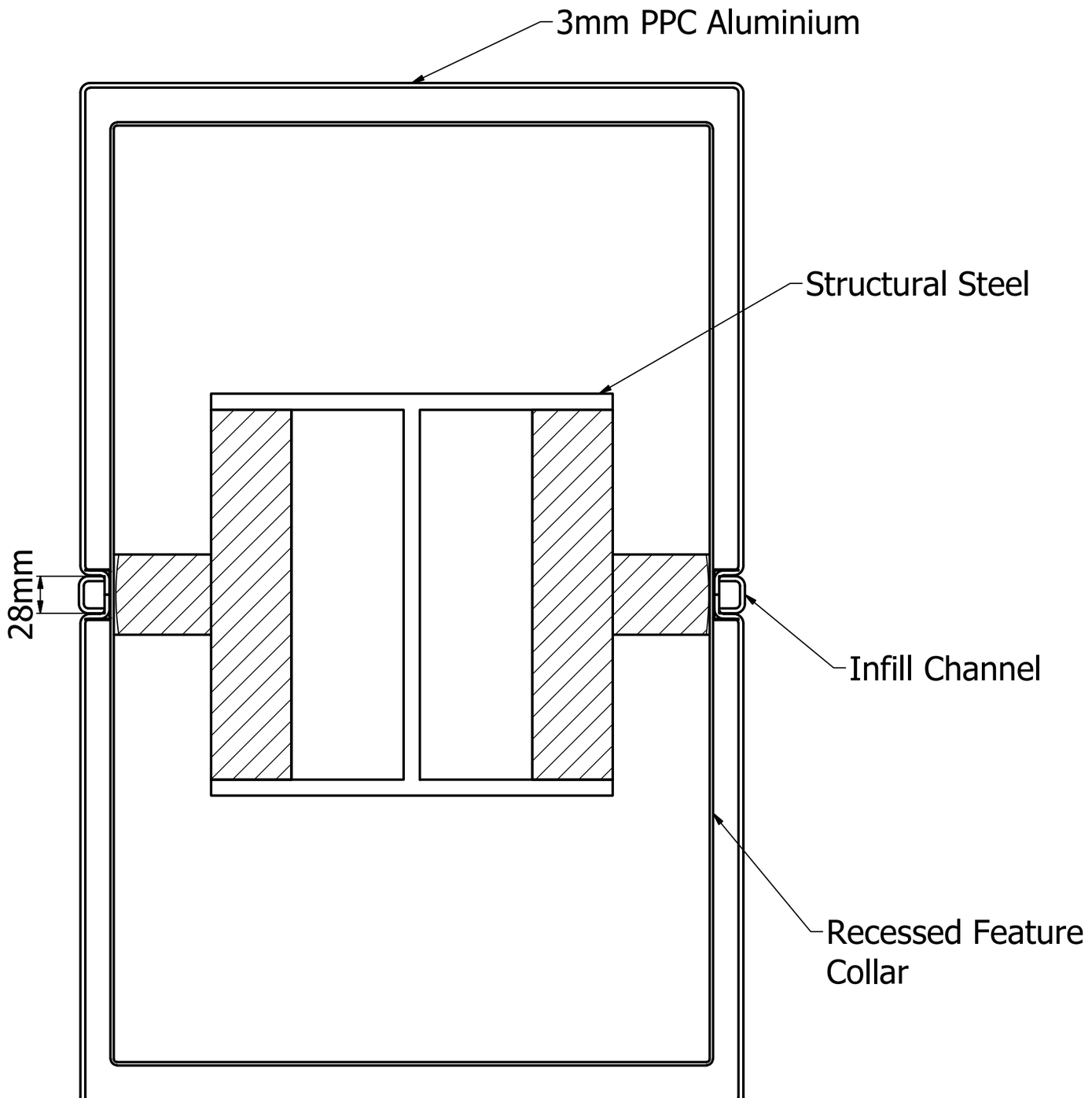

Product Reference: Contour PPC Aluminium Rectangular Column Casing.

Manufacturer: Contour Casings,
Stafford Park 15
Telford, TF3 3BB

Material Specification: Fabricated from pressed Aluminium alloy sheet to BS EN 485/515/573, grade 1050A-H14/4015-H12. Minimum thickness 3mm.

Size: Up to 3000mm in a single piece, larger bespoke heights available through vertical stacking. External diameter 250 - 1000mm, larger bespoke diameters available though multiple sections.

Shape: Circular, Square, Rectangular, Lozenge, Bullet, Elipse. Bespoke configurations available.

Finish: Mill finish or Polyester Powder Coated in any RAL or BS colour. Guarantee of up to 25 years provided.

Joint Detail: Shadow Gap.

Accessories: Optional head / skirting collars, acoustic lining, thermal foam, access panel, decorative outer rings, male & female assembly joints, integrated signage, DDA options.

Contour Casings
Stafford Park 15
Telford
TF3 3BB
Tel: 01952 290498
Email: sales@contourcasings.co.uk
Web: www.contourcasings.co.uk

PPC aluminium casings – BIM objects & DWG files

Aluminium Column Casing - Bullet

Aluminium Column Casing - Circular

Aluminium Column Casing - Ellipse

Aluminium Column Casing - Lozenge

Aluminium Column Casing - Square / Rectangular

BIM

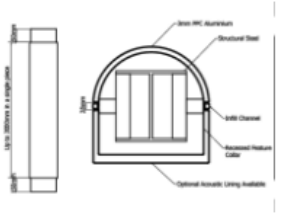

PPC Aluminium Column Casings - Bullet

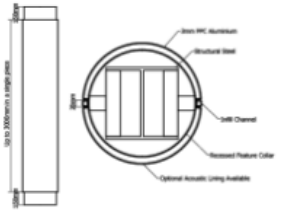

PPC Aluminium Column Casing - Circular

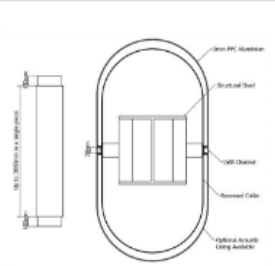

PPC Aluminium Column Casing - Lozenge

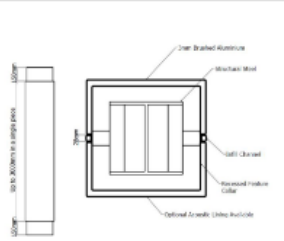

PPC Aluminium Column Casing - Square / Rectangle

DWG

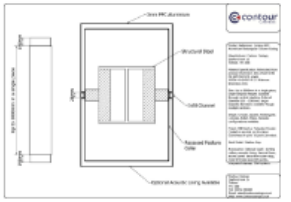

PPC Aluminium Column Casing - Rectangle

Brushed aluminium casings

Overview
Brushed aluminium column casings provide a directional grained finish yielding a uniform appearance which helps disguise any abrasions that may incur when the product is in situ, in even the most demanding environments.

A wide choice of design options and decorative features are available using this modern, contemporary finish.

Technical specifications:

Manufacture
Manufactured from lightweight aluminium, this robust column casing solution has a 3mm metal skin.

Supplied in sections of up to 3m, an additional internal support structure can be designed for large diameter column casing configurations consisting of more than 2 sections.

The jointing arrangement is a 28mm recess which can be left open or infilled with either a feature gasket or metal to match the casing finish.

All aluminium used conforms to BS EN 485/515/573, grade 1050A-H14/4015-H12.

Brushed aluminium casings

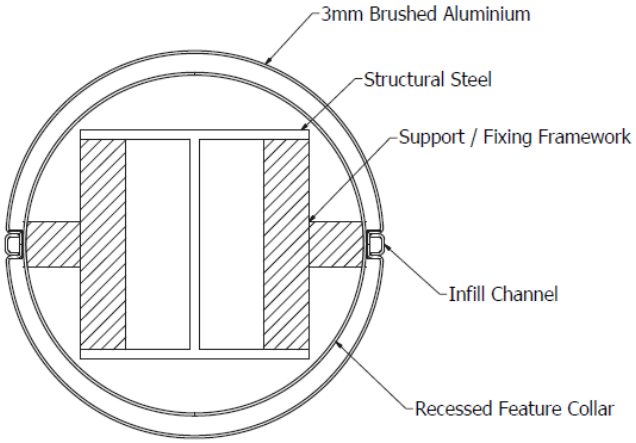

Technical specifications:

Application
Equally suited to both interior and exterior locations, the Contour brushed aluminium column casing system is available in a range of standard and bespoke shapes and sizes, to meet precise project and installation needs.

Finish options
The Contour brushed aluminium column casing range delivers a directional grained finish and uniform aesthetic.

Fire performance
Brushed column casings are fabricated from ferrous and non-ferrous metals; they are non-combustible and achieve a Class 'O' spread of flame to BS 476-4 standard.

Key characteristics
- Hard-wearing finish
- Contemporary aesthetic
- Flexible design options

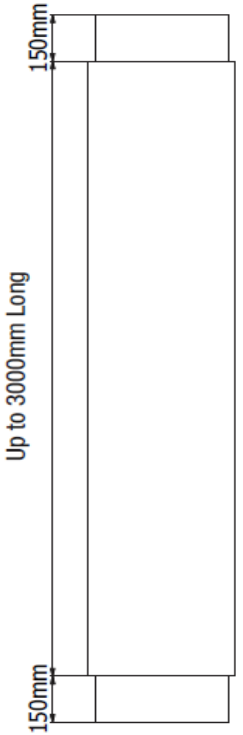

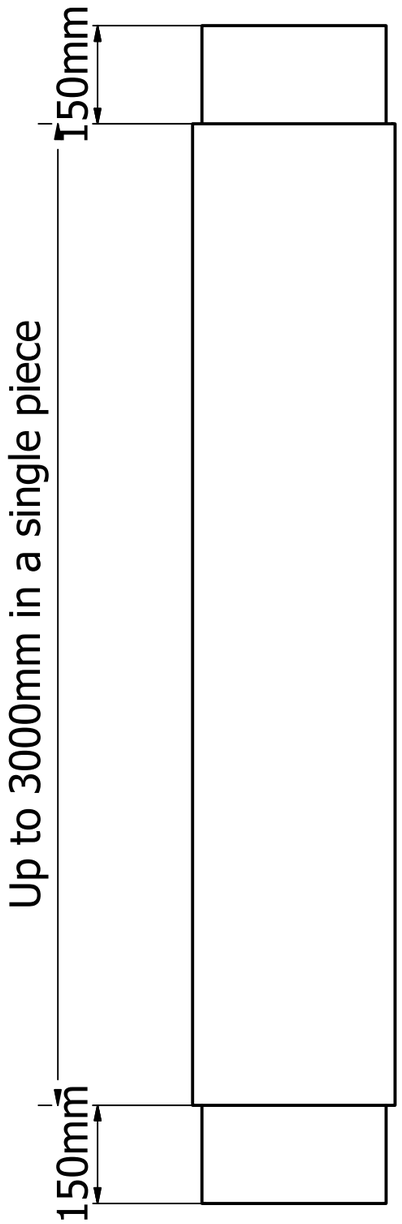

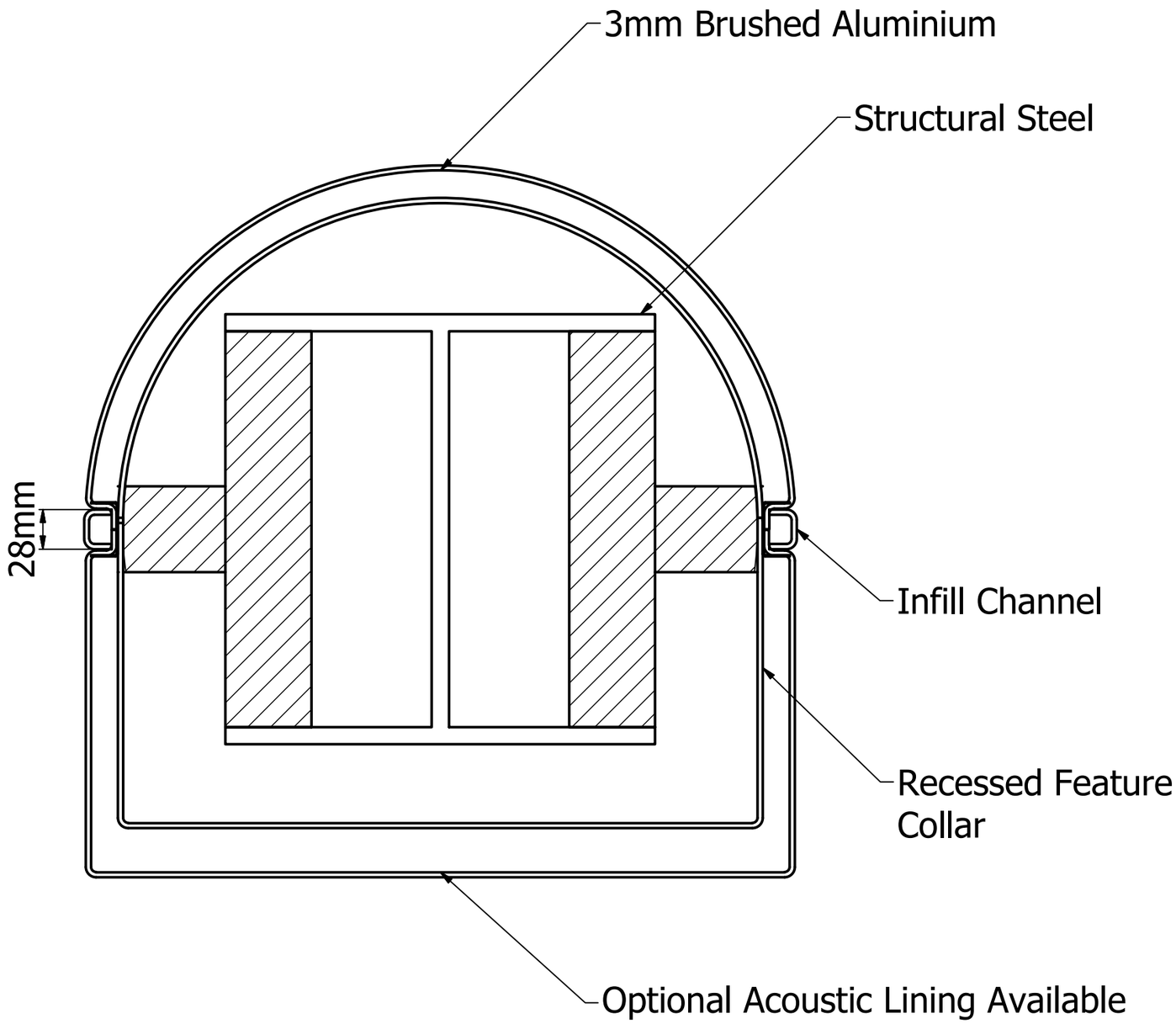

Product Reference: Contour Brushed Aluminium Column Casing.

Manufacturer: Contour Casings, Stafford Park 15 Telford, TF3 3BB

Material Specification: Fabricated from pressed Aluminium alloy sheet to BS EN 485/515/573, grade 1050A-H14/4015-H12. Minimum thickness 3mm.

Size: Up to 3000mm in a single piece, larger bespoke heights available through vertical stacking. External diameter 250 - 1000mm, larger bespoke diameters available though multiple sections.

Shape: Circular, Square, Rectangular, Lozenge, Bullet, Elipse. Bespoke configurations available.

Finish: Brushed Aluminium DP1.

Joint Detail: Shadow Gap.

Accessories: Optional head / skirting collars, acoustic lining, thermal foam, access panel, decorative outer rings, male & female assembly joints, integrated signage, DDA options.

Contour Casings
Stafford Park 15
Telford
TF3 3BB
Tel: 01952 290498
Email: sales@contourcasings.co.uk
Web: www.contourcasings.co.uk

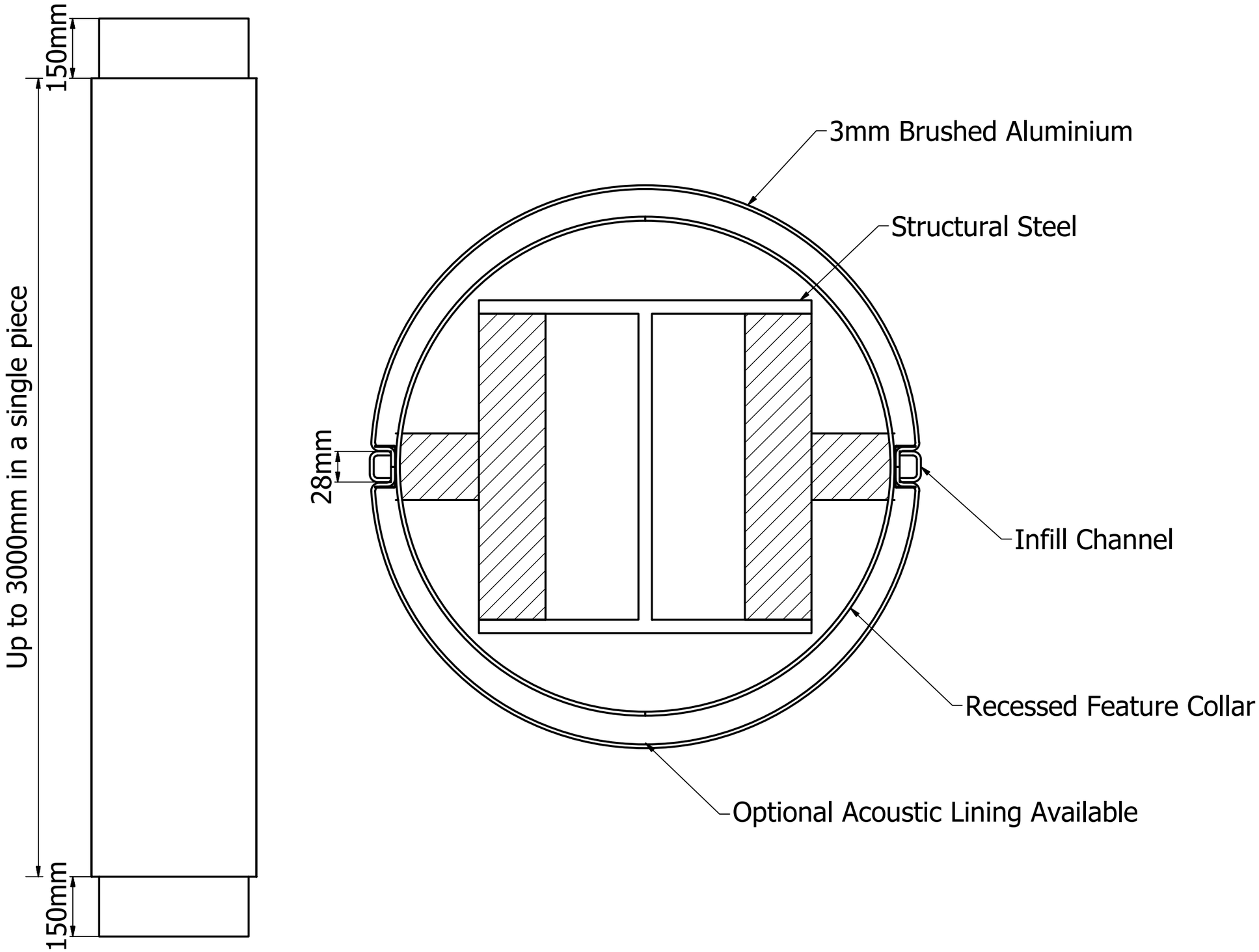

Product Reference: Contour Brushed Aluminium Column Casing.

Manufacturer: Contour Casings, Stafford Park 15 Telford, TF3 3BB

Material Specification: Fabricated from pressed Aluminium alloy sheet to BS EN 485/515/573, grade 1050A-H14/4015-H12. Minimum thickness 3mm.

Size: Up to 3000mm in a single piece, larger bespoke heights available through vertical stacking. External diameter 250 - 1000mm, larger bespoke diameters available though multiple sections.

Shape: Circular, Square, Rectangular, Lozenge, Bullet, Elipse. Bespoke configurations available.

Finish: Brushed Aluminium DP1.

Joint Detail: Shadow Gap.

Accessories: Optional head / skirting collars, acoustic lining, thermal foam, access panel, decorative outer rings, male & female assembly joints, integrated signage, DDA options.

Contour Casings
Stafford Park 15
Telford
TF3 3BB
Tel: 01952 290498
Email: sales@contourcasings.co.uk
Web: www.contourcasings.co.uk

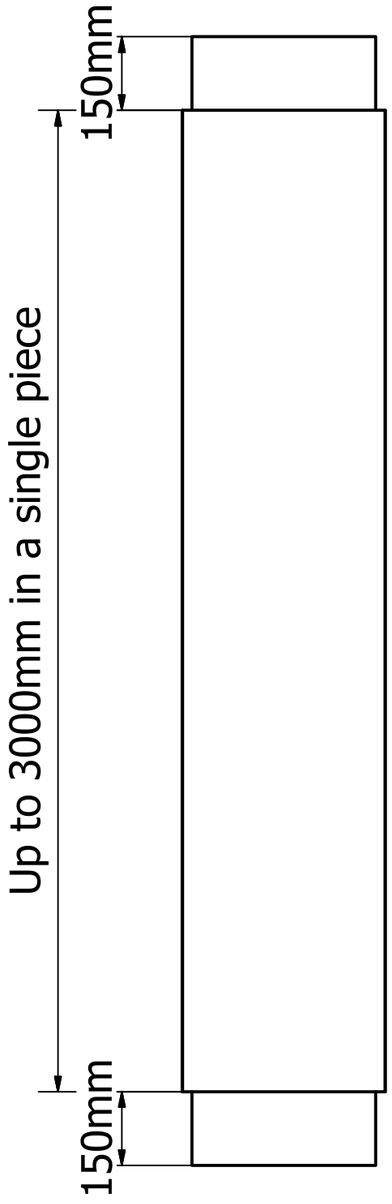

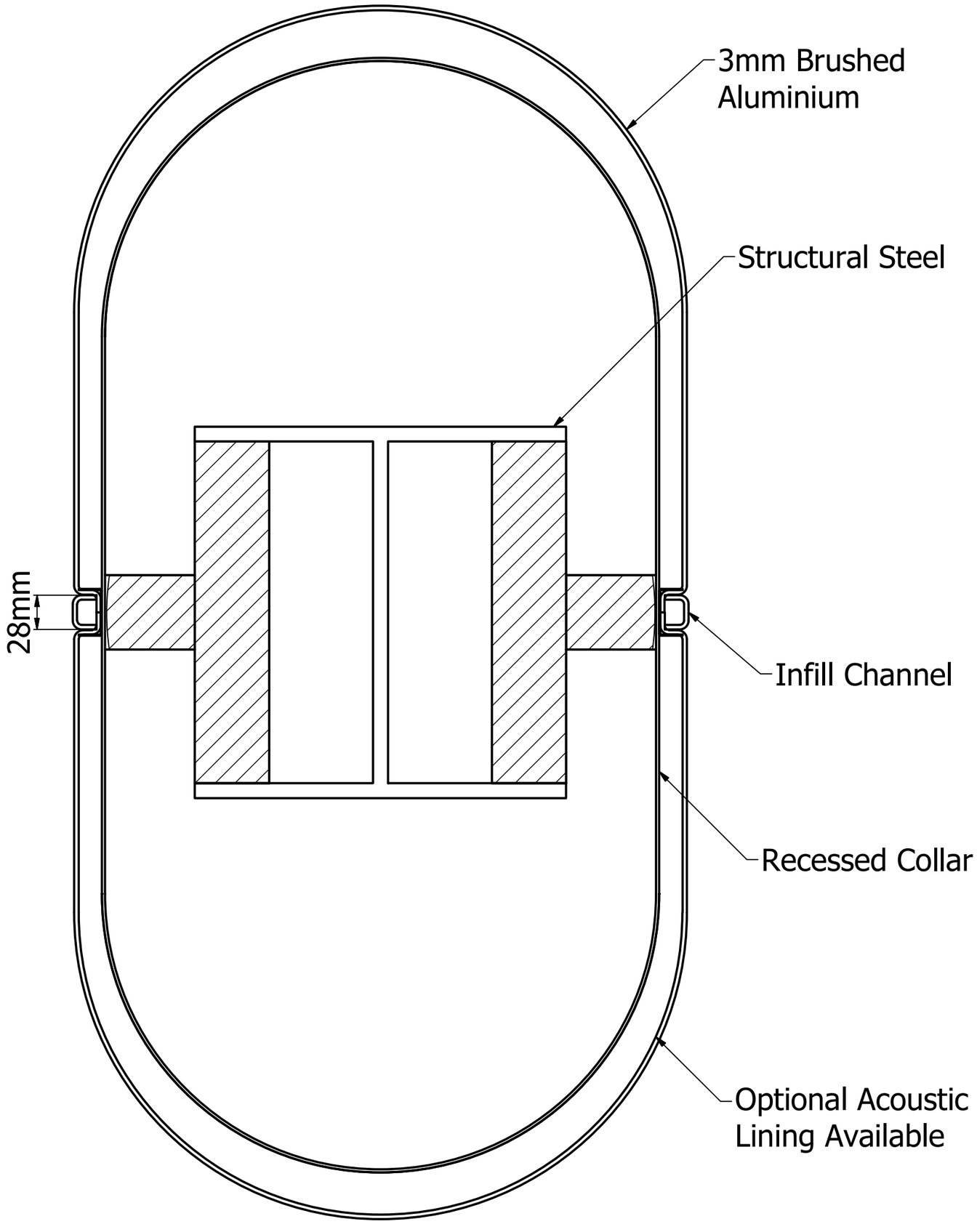

3mm Brushed Aluminium

Structural Steel

Infill Channel

Recessed Collar

Optional Acoustic Lining Available

Product Reference: Contour Brushed Aluminium Column Casing.

Manufacturer: Contour Casings, Stafford Park 15 Telford, TF3 3BB

Material Specification: Fabricated from pressed Aluminium alloy sheet to BS EN 485/515/573, grade 1050A-H14/4015-H12. Minimum thickness 3mm.

Size: Up to 3000mm in a single piece, larger bespoke heights available through vertical stacking. External diameter 250 - 1000mm, larger bespoke diameters available though multiple sections.

Shape: Circular, Square, Rectangular, Lozenge, Bullet, Elipse. Bespoke configurations available.

Finish: Brushed Aluminium DP1.

Joint Detail: Shadow Gap.

Accessories: Optional head / skirting collars, acoustic lining, thermal foam, access panel, decorative outer rings, male & female assembly joints, integrated signage, DDA options.

Contour Casings
Stafford Park 15
Telford
TF3 3BB
Tel: 01952 290498
Email: sales@contourcasings.co.uk
Web: www.contourcasings.co.uk

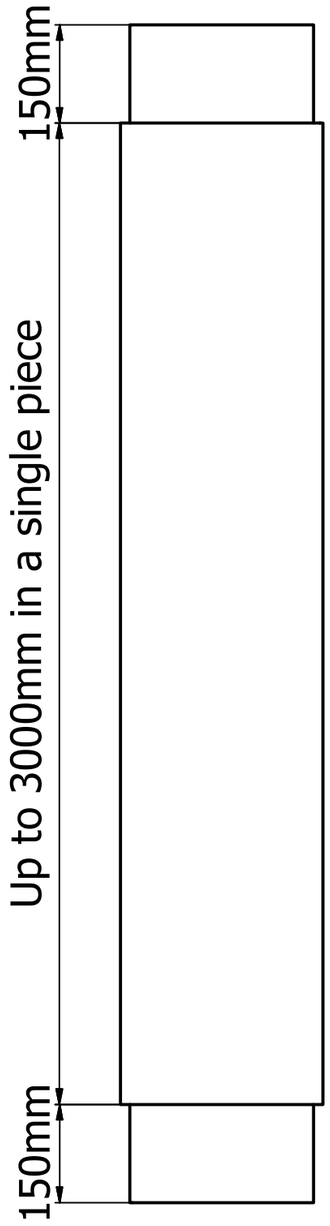

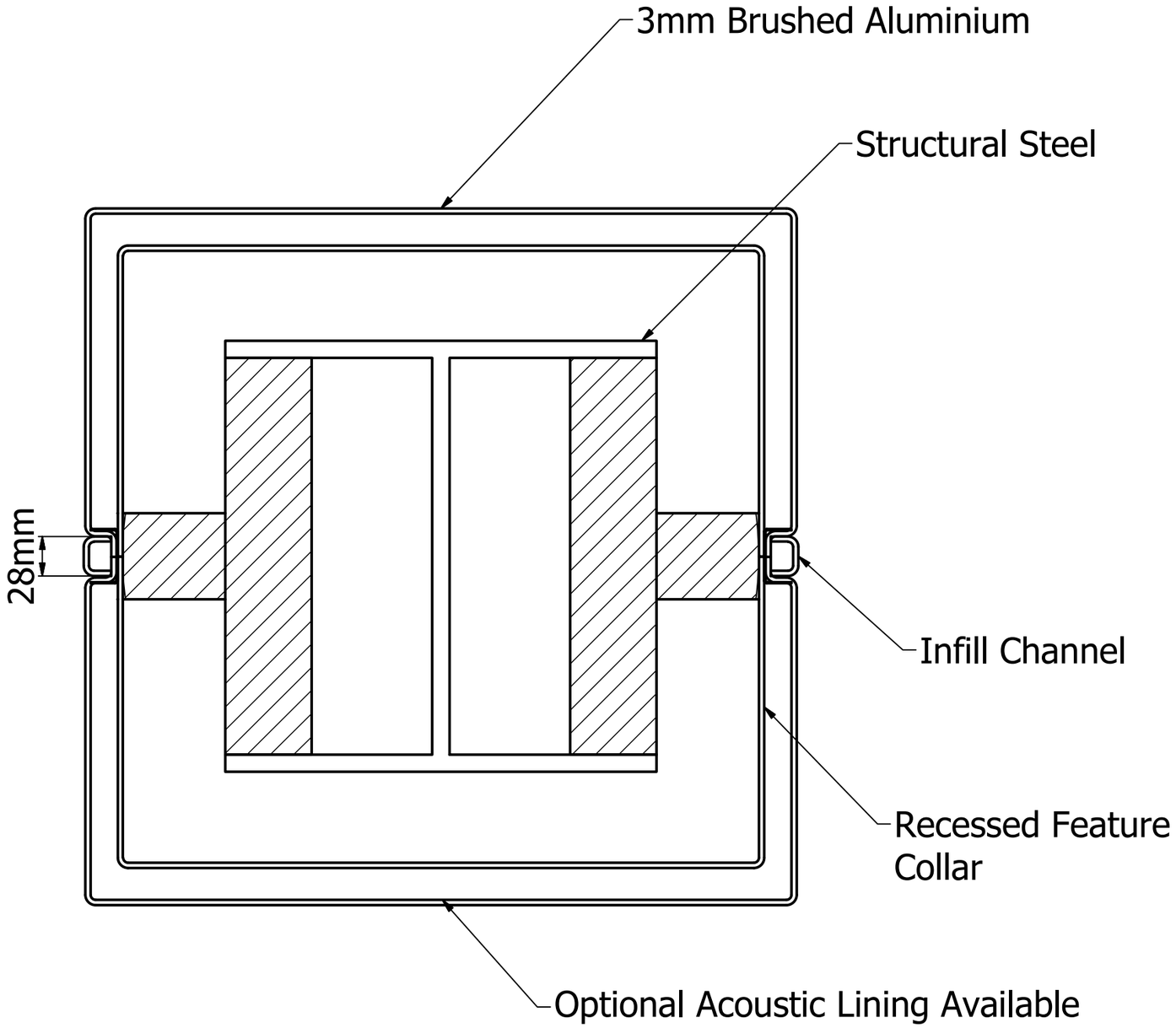

Product Reference: Contour Brushed Aluminium Column Casing.

Manufacturer: Contour Casings,
Stafford Park 15
Telford, TF3 3BB

Material Specification: Fabricated from pressed Aluminium alloy sheet to BS EN 485/515/573, grade 1050A-H14/4015-H12. Minimum thickness 3mm.

Size: Up to 3000mm in a single piece, larger bespoke heights available through vertical stacking. External diameter 250 - 1000mm, larger bespoke diameters available though multiple sections.

Shape: Circular, Square, Rectangular, Lozenge, Bullet, Elipse. Bespoke configurations available.

Finish: Brushed Aluminium DP1.

Joint Detail: Shadow Gap.

Accessories: Optional head / skirting collars, acoustic lining, thermal foam, access panel, decorative outer rings, male & female assembly joints, integrated signage, DDA options.

Contour Casings
Stafford Park 15
Telford
TF3 3BB
Tel: 01952 290498
Email: sales@contourcasings.co.uk
Web: www.contourcasings.co.uk

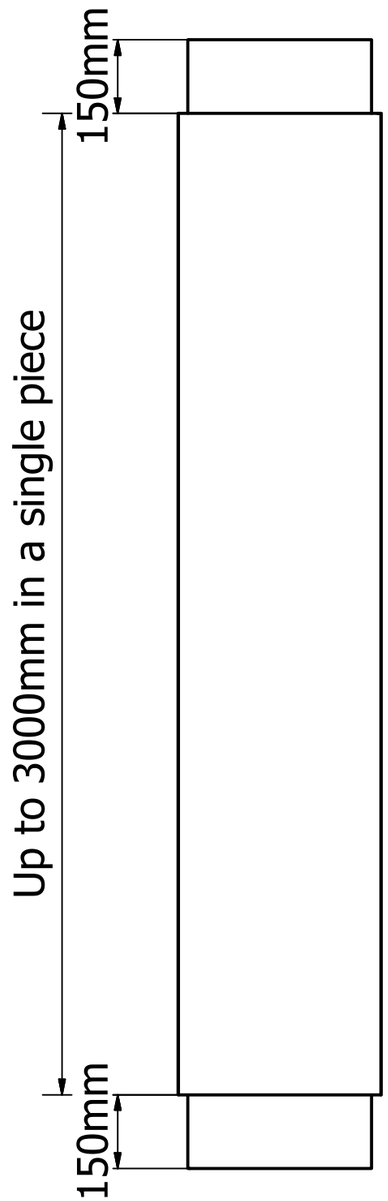

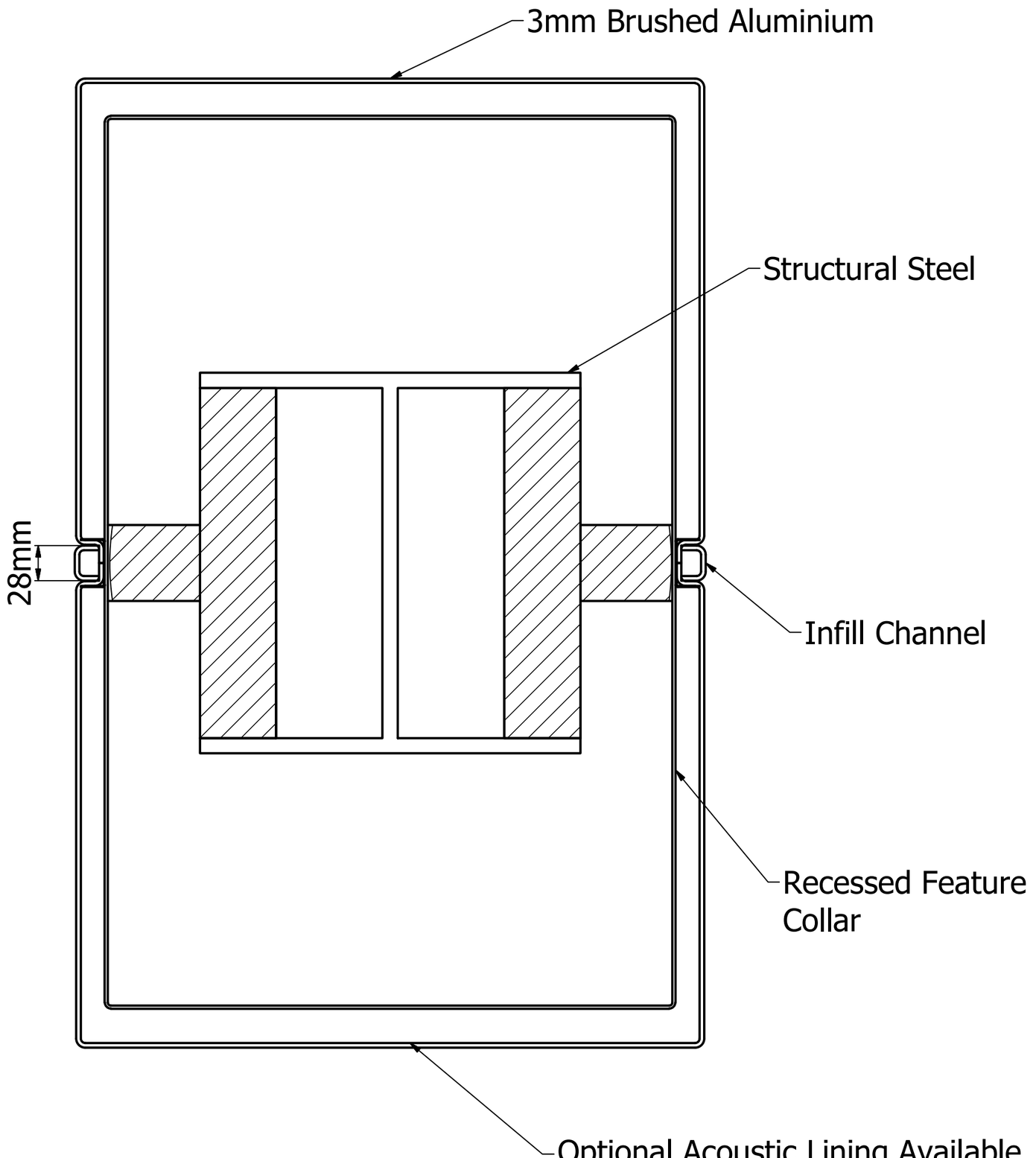

Product Reference: Contour Brushed Aluminium Column Casing.

Manufacturer: Contour Casings, Stafford Park 15 Telford, TF3 3BB

Material Specification: Fabricated from pressed Aluminium alloy sheet to BS EN 485/515/573, grade 1050A-H14/4015-H12. Minimum thickness 3mm.

Size: Up to 3000mm in a single piece, larger bespoke heights available through vertical stacking. External diameter 250 - 1000mm, larger bespoke diameters available though multiple sections.

Shape: Circular, Square, Rectangular, Lozenge, Bullet, Elipse. Bespoke configurations available.

Finish: Brushed Aluminium DP1.

Joint Detail: Shadow Gap.

Accessories: Optional head / skirting collars, acoustic lining, thermal foam, access panel, decorative outer rings, male & female assembly joints, integrated signage, DDA options.

Contour Casings
Stafford Park 15
Telford
TF3 3BB
Tel: 01952 290498
Email: sales@contourcasings.co.uk
Web: www.contourcasings.co.uk

Brushed aluminium casings – BIM objects & DWG files

Aluminium Column Casing - Bullet

Aluminium Column Casing - Circular

Aluminium Column Casing - Ellipse

Aluminium Column Casing - Lozenge

Aluminium Column Casing - Square / Rectangular

BIM

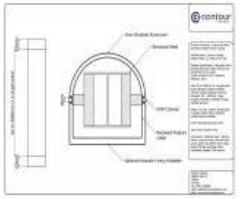

Brushed Aluminium Column Casings - Bullet

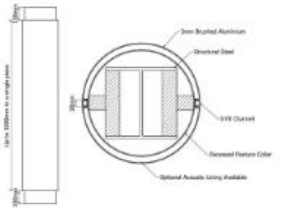

Brushed Aluminium Column Casing - Circular

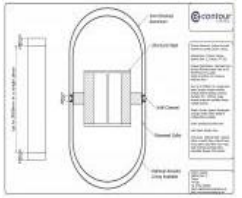

Brushed Aluminium Column Casing - Lozenge

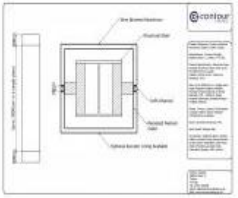

Brushed Aluminium Column Casing - Square / Rectangle

DWG

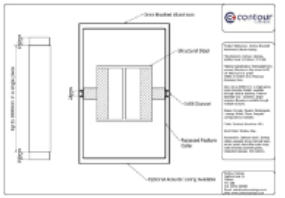

Brushed Aluminium Column Casing - Rectangle

Stainless steel casings

Overview
Frequently specified for their hard-wearing properties and sleek, stylish aesthetic, the Contour stainless steel column casing range is a strong, high-quality solution suitable for environments where a chic aesthetic is required.

Technical specifications:

Manufacture
Manufactured from high-quality stainless steel, this robust column casing solution has a 1.5mm metal skin as standard.

Supplied in sections of up to 3m, an additional internal support structure can be designed for large diameter column casing configurations consisting of more than 2 sections.

The jointing arrangement is a 28mm recess which can be left open or infilled with either a feature gasket or metal to match the casing finish.

All stainless steel used conforms to EN 10088 & BS EN 10259.

Stainless steel casings

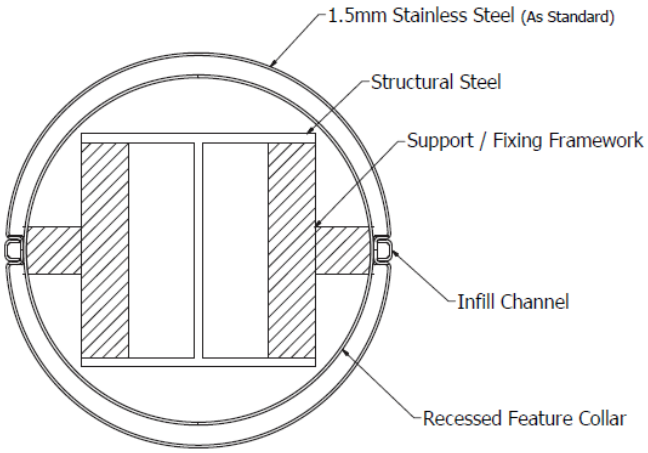

Technical specifications:

Application
Equally suited to both interior and exterior locations, the Contour stainless steel column casing system is available in a range of standard and bespoke shapes and sizes, to meet precise project and installation needs.

Finish options
The Contour stainless steel column casing range delivers a high-quality finish and stylish aesthetic.

Fire performance
Stainless steel column casings are fabricated from ferrous and non-ferrous metals; they are non-combustible and achieve a Class 'O' spread of flame to BS 476-4 standard.

Key characteristics
- Sleek / stylish aesthetic
- Durable finish
- Flexible design options

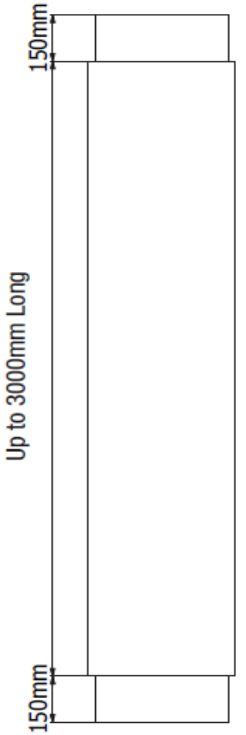

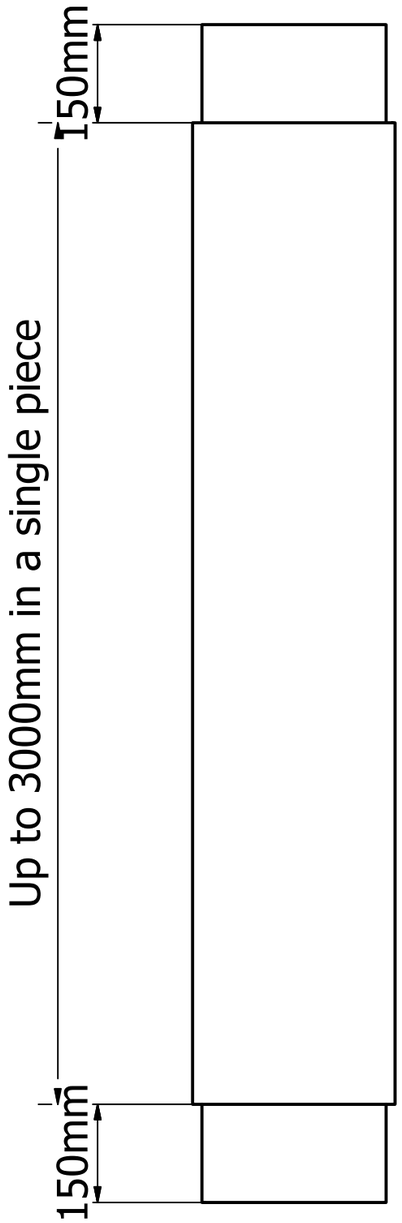

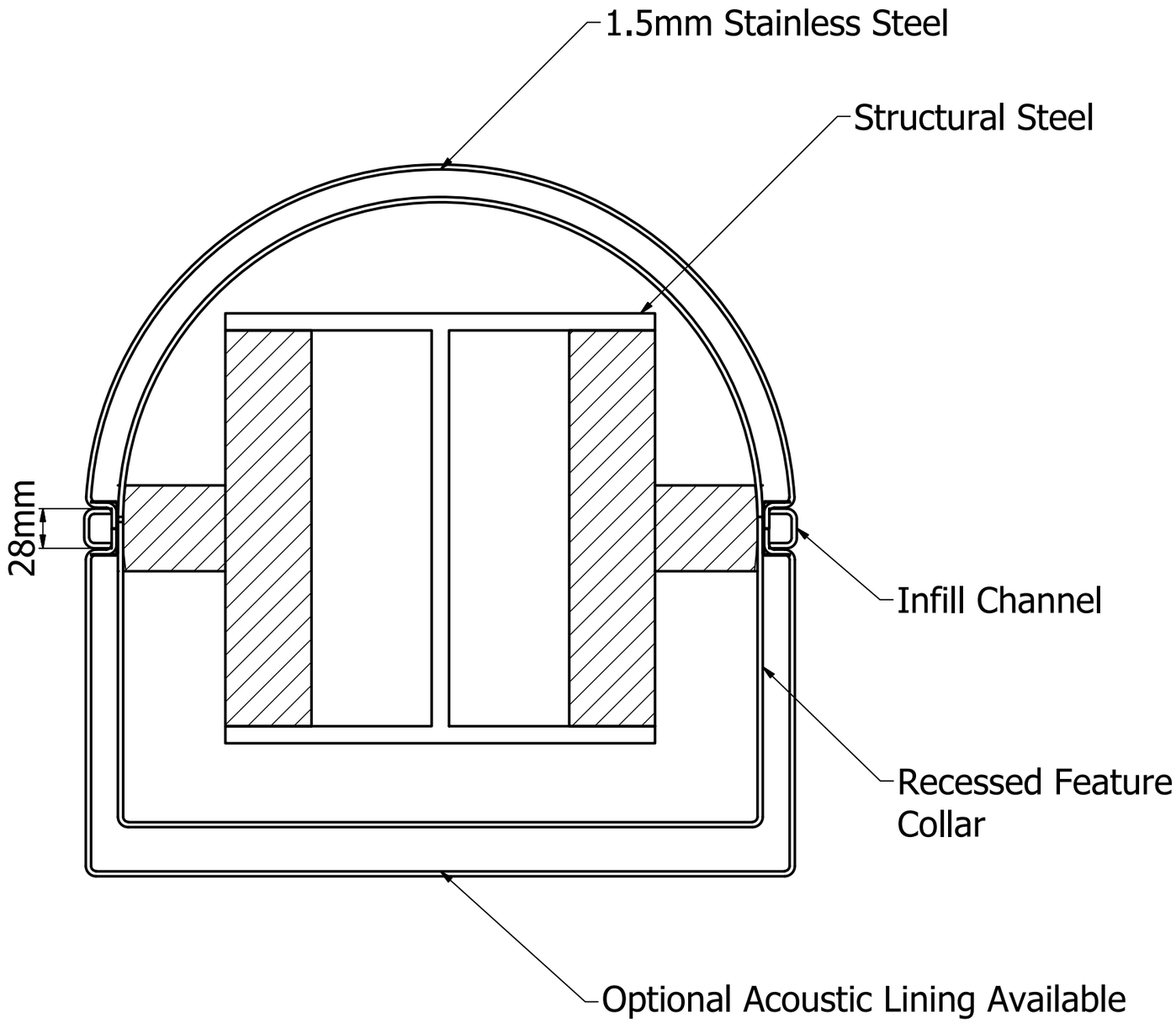

Product Reference: Contour Stainless Steel Column Casing.

Manufacturer: Contour Casings, Stafford Park 15 Telford, TF3 3BB

Material Specification: Fabricated from pressed Stainless Steel alloy BS EN 304-1.4301/316-1.4401. Minimum thickness 1.5mm.

Size: Up to 3000mm in a single piece, larger bespoke heights available through vertical stacking. External diameter 250 - 1000mm, larger bespoke diameters available though multiple sections.

Shape: Circular, Square, Rectangular, Lozenge, Bullet, Elipse. Bespoke configurations available.

Finish: Stainless Steel finish 2D, 2B and P240 brushed.

Joint Detail: Shadow Gap.

Accessories: Optional head / skirting collars, acoustic lining, thermal foam, access panel, decorative outer rings, male & female assembly joints, integrated signage, DDA options, MetalArt™.

Contour Casings
Stafford Park 15
Telford
TF3 3BB
Tel: 01952 290498
Email: sales@contourcasings.co.uk
Web: www.contourcasings.co.uk

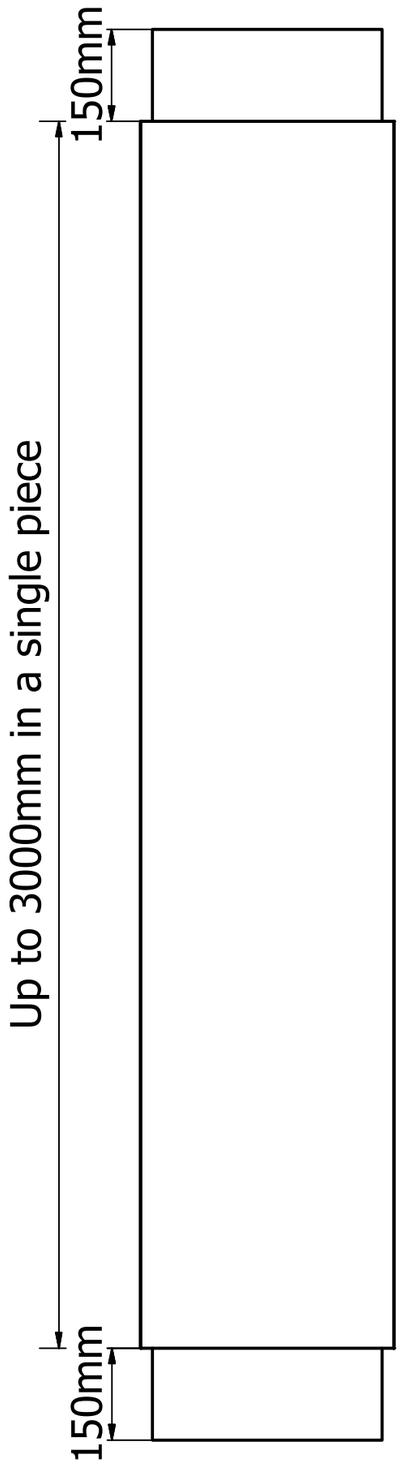

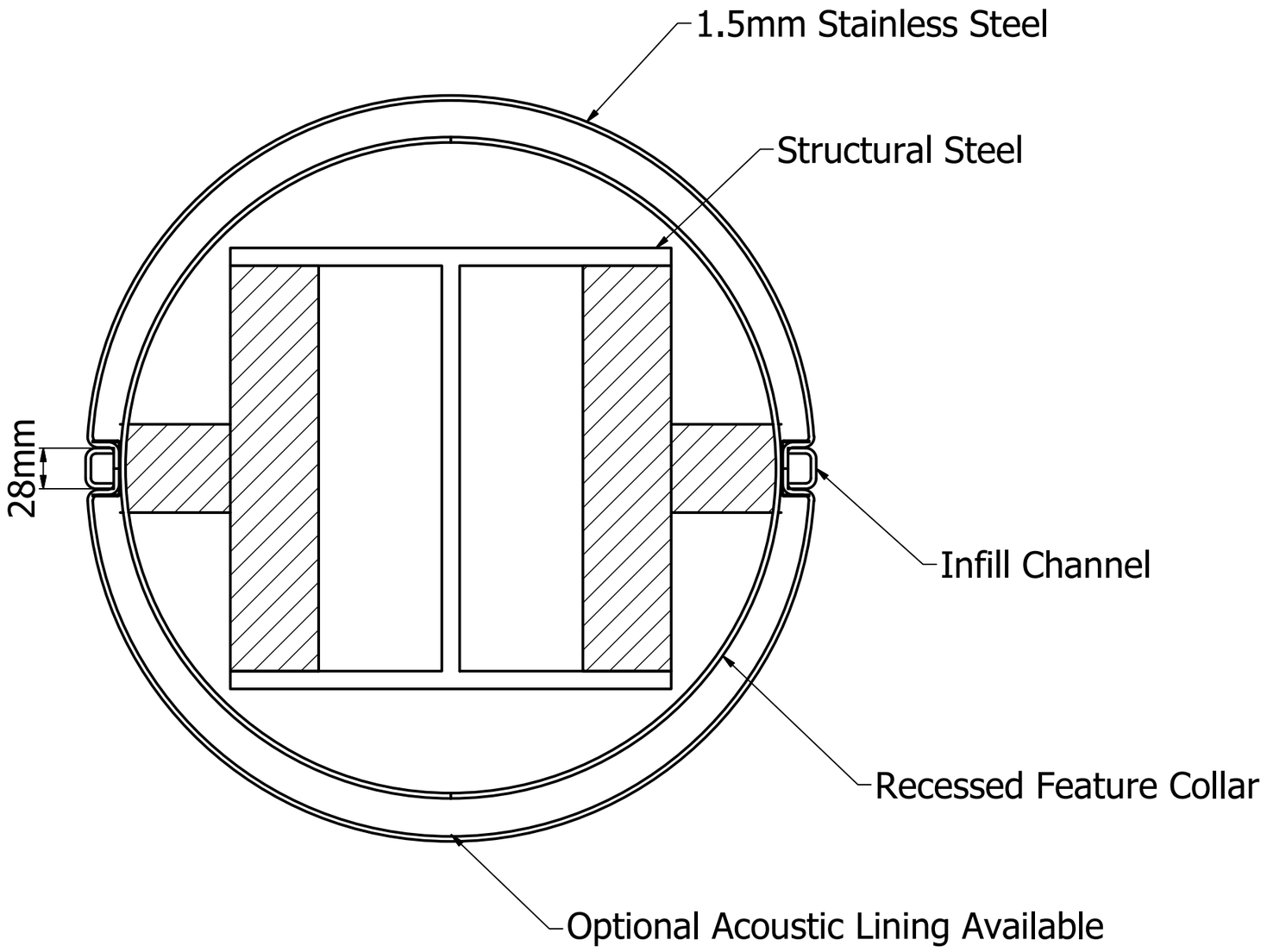

Product Reference: Contour Stainless Steel Column Casing.

Manufacturer: Contour Casings,
Stafford Park 15
Telford, TF3 3BB.

Material Specification: Fabricated from pressed Stainless Steel alloy BS EN 304-1.4301/316-1.4401. Minimum thickness 1.5mm.

Size: Up to 3000mm in a single piece, larger bespoke heights available through vertical stacking. External diameter 250 - 1000mm, larger bespoke diameters available though multiple sections.

Shape: Circular, Square, Rectangular, Lozenge, Bullet, Elipse. Bespoke configurations available.

Finish: Stainless Steel finish 2D, 2B and P240 brushed.

Joint Detail: Shadow Gap.

Accessories: Optional head / skirting collars, acoustic lining, thermal foam, access panel, decorative outer rings, male & female assembly joints, integrated signage, DDA options, MetalArt™.

Contour Casings
Stafford Park 15
Telford
TF3 3BB
Tel: 01952 290498
Email: sales@contourcasings.co.uk
Web: www.contourcasings.co.uk

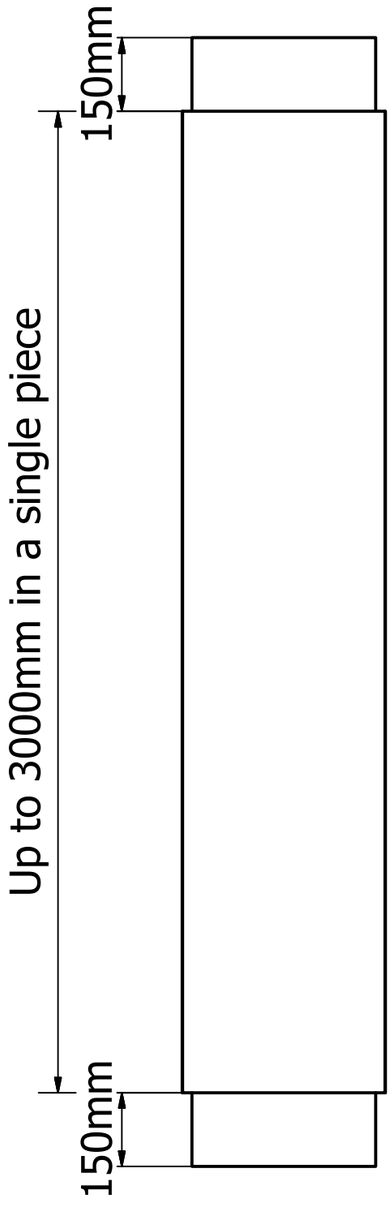

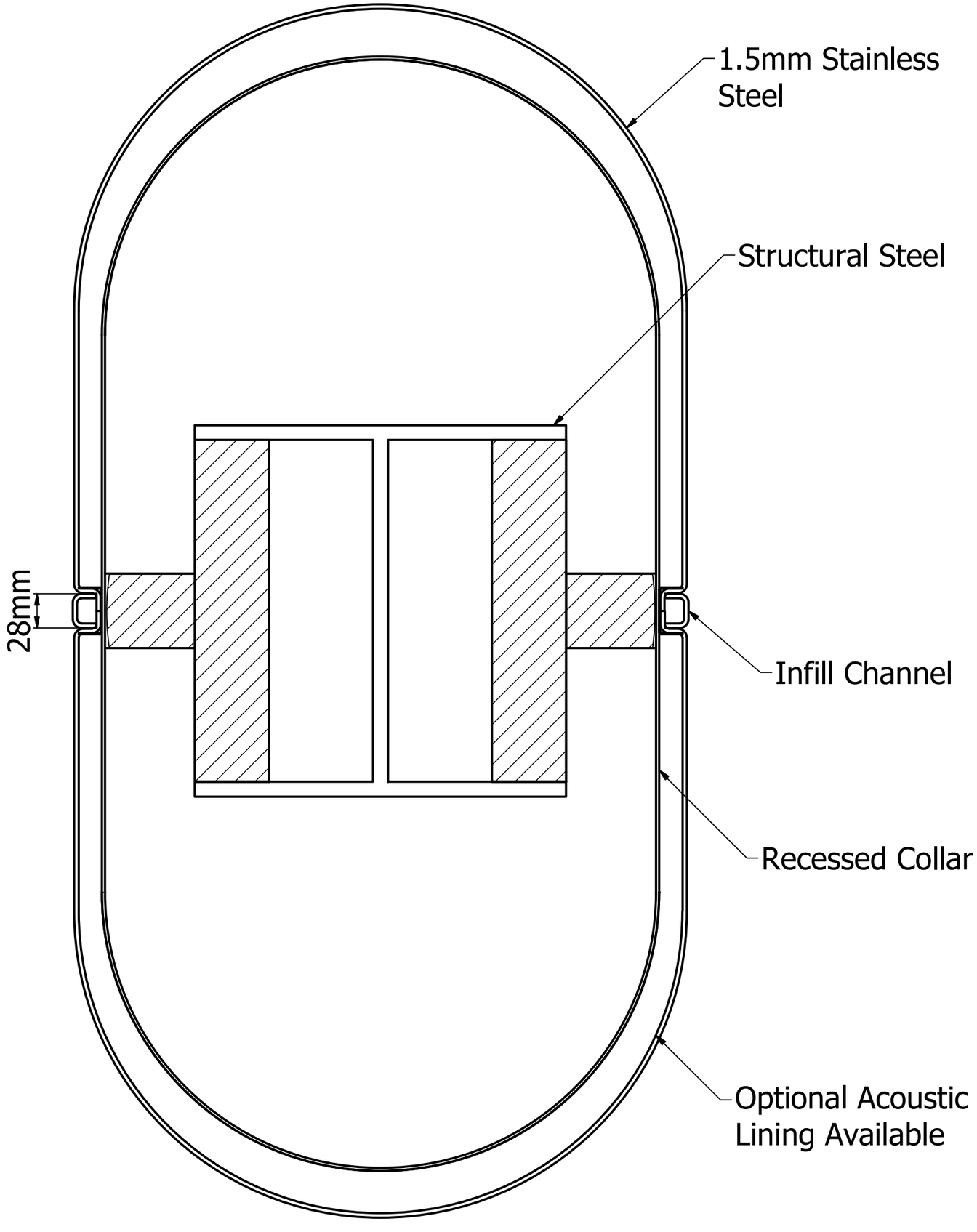

1.5mm Stainless Steel

Structural Steel

Infill Channel

Recessed Collar

Optional Acoustic Lining Available

Product Reference: Contour Stainless Steel Column Casing.

Manufacturer: Contour Casings, Stafford Park 15 Telford, TF3 3BB

Material Specification: Fabricated from pressed Stainless Steel alloy BS EN 304-1.4301/316-1.4401. Minimum thickness 1.5mm.

Size: Up to 3000mm in a single piece, larger bespoke heights available through vertical stacking. External diameter 250 - 1000mm, larger bespoke diameters available though multiple sections.

Shape: Circular, Square, Rectangular, Lozenge, Bullet, Elipse. Bespoke configurations available.

Finish: Stainless Steel finish 2D, 2B and P240 brushed.

Joint Detail: Shadow Gap.

Accessories: Optional head / skirting collars, acoustic lining, thermal foam, access panel, decorative outer rings, male & female assembly joints, integrated signage, DDA options, MetalArt™.

Contour Casings
Stafford Park 15
Telford
TF3 3BB
Tel: 01952 290498
Email: sales@contourcasings.co.uk
Web: www.contourcasings.co.uk

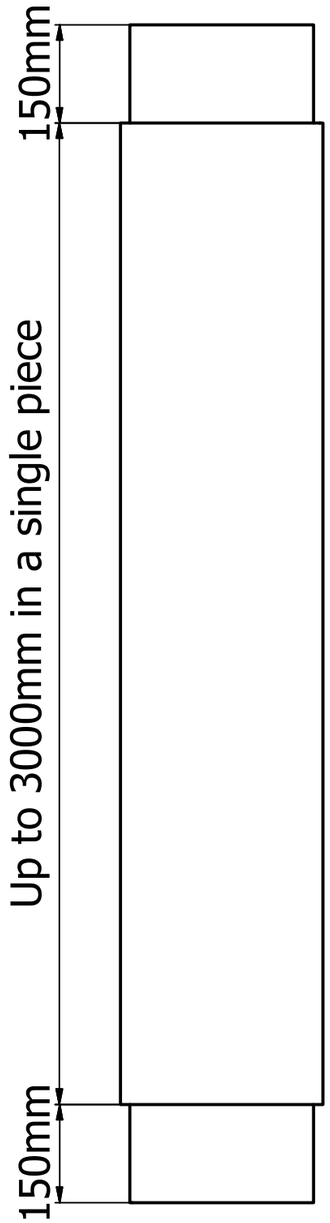

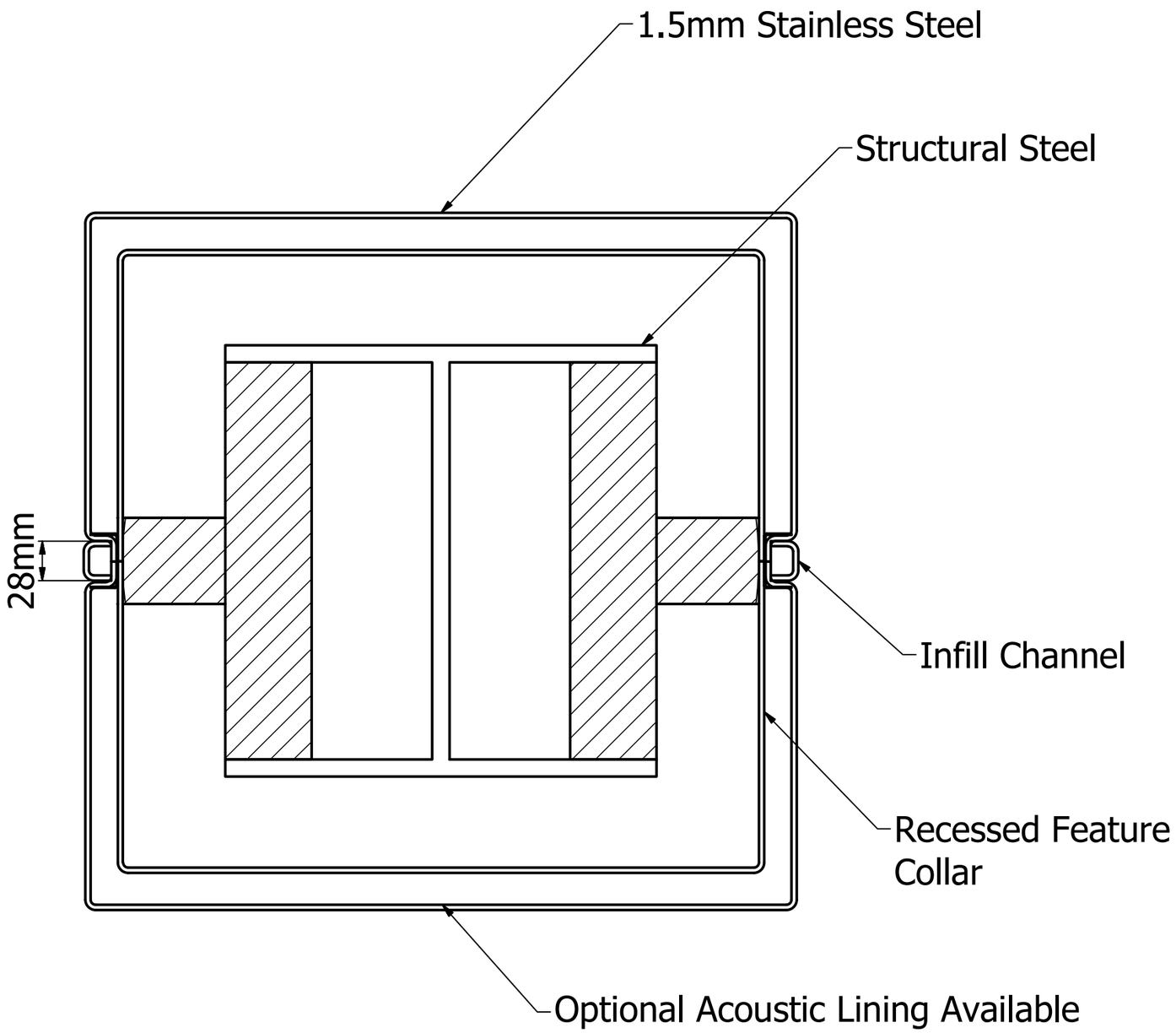

Product Reference: Contour Stainless Steel Column Casing.

Manufacturer: Contour Casings,
Stafford Park 15
Telford, TF3 3BB

Material Specification: Fabricated from pressed Stainless Steel alloy BS EN 304-1.4301/316-1.4401. Minimum thickness 1.5mm.

Size: Up to 3000mm in a single piece, larger bespoke heights available through vertical stacking. External diameter 250 - 1000mm, larger bespoke diameters available though multiple sections.

Shape: Circular, Square, Rectangular, Lozenge, Bullet, Elipse. Bespoke configurations available.

Finish: Stainless Steel finish 2D, 2B and P240 brushed.

Joint Detail: Shadow Gap.

Accessories: Optional head / skirting collars, acoustic lining, thermal foam, access panel, decorative outer rings, male & female assembly joints, integrated signage, DDA options, MetalArt™.

Contour Casings
Stafford Park 15
Telford
TF3 3BB
Tel: 01952 290498
Email: sales@contourcasings.co.uk
Web: www.contourcasings.co.uk

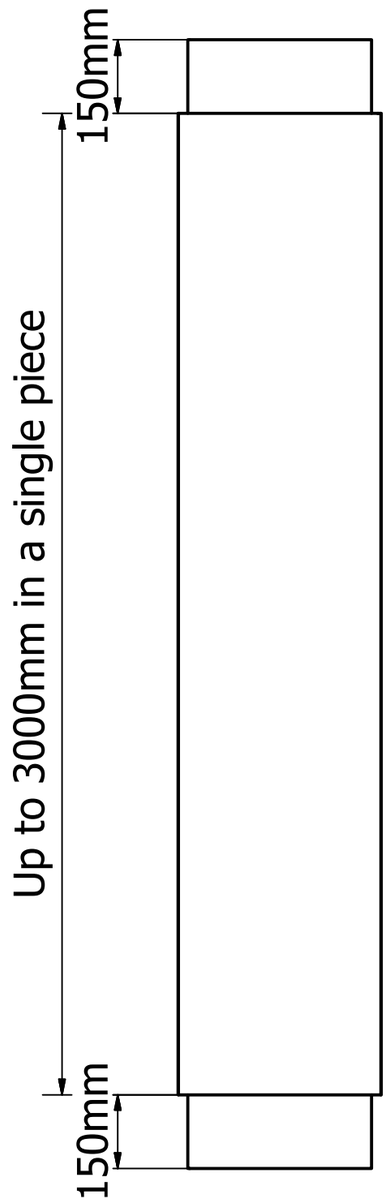

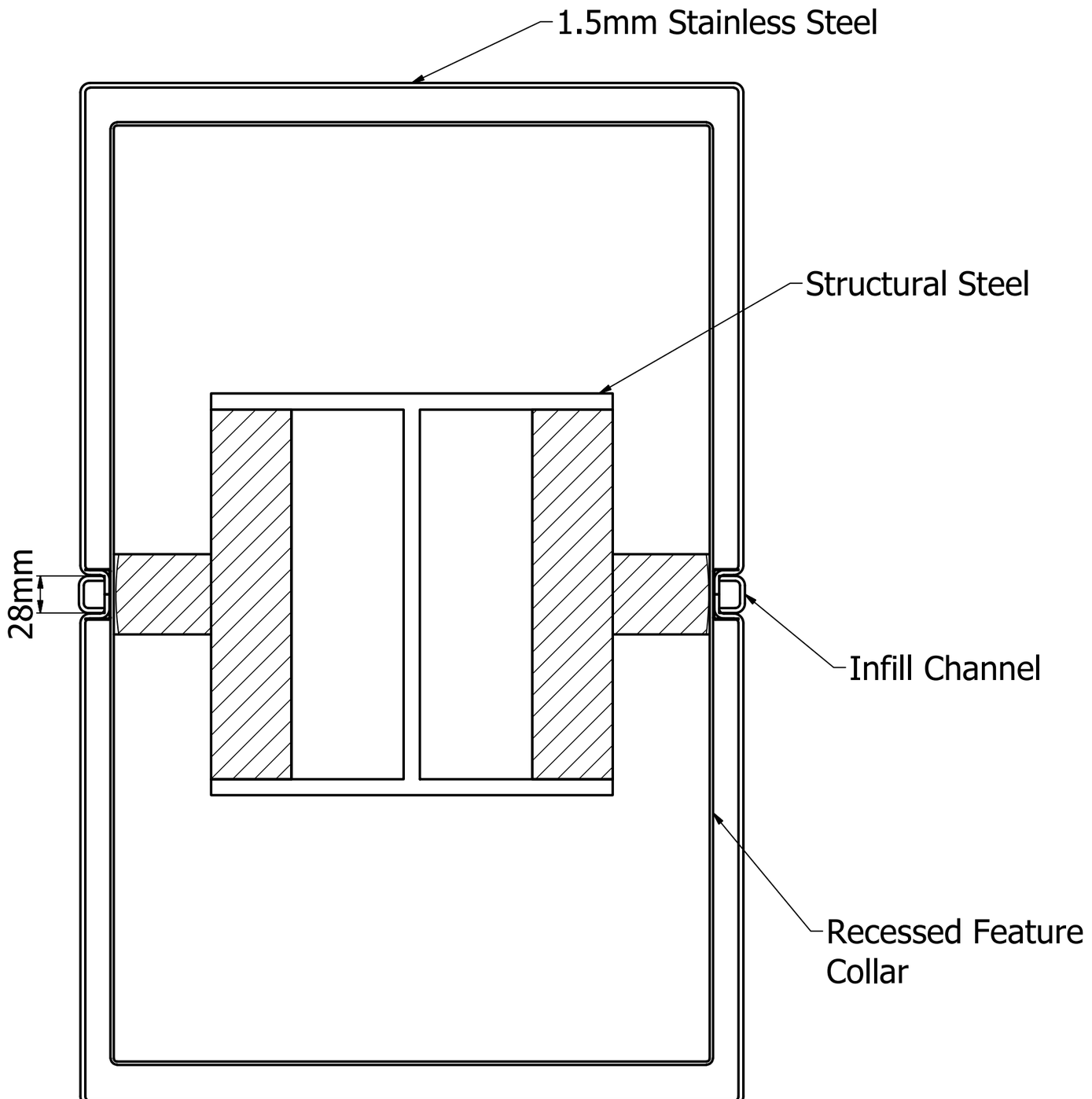

Product Reference: Contour Stainless Steel Column Casing.

Manufacturer: Contour Casings,
Stafford Park 15
Telford, TF3 3BB

Material Specification: Fabricated from pressed Stainless Steel alloy BS EN 304-1.4301/316-1.4401. Minimum thickness 1.5mm.

Size: Up to 3000mm in a single piece, larger bespoke heights available through vertical stacking. External diameter 250 - 1000mm, larger bespoke diameters available though multiple sections.

Shape: Circular, Square, Rectangular, Lozenge, Bullet, Elipse. Bespoke configurations available.

Finish: Stainless Steel finish 2D, 2B and P240 brushed.

Joint Detail: Shadow Gap.

Accessories: Optional head / skirting collars, acoustic lining, thermal foam, access panel, decorative outer rings, male & female assembly joints, integrated signage, DDA options, MetalArt™.

Contour Casings
Stafford Park 15
Telford
TF3 3BB
Tel: 01952 290498
Email: sales@contourcasings.co.uk
Web: www.contourcasings.co.uk

Stainless steel casings – BIM objects & DWG files

Stainless Steel Column Casing - Bullet

Stainless Steel Column Casing - Circular

Stainless Steel Column Casing - Ellipse

Stainless Steel Column Casing - Lozenge

Stainless Steel Column Casing - Square / Rectangular

BIM

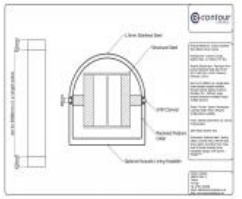

Stainless Steel Column Casing - Bullet

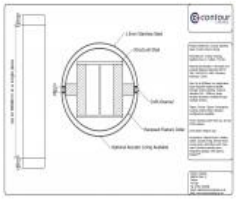

Stainless Steel Column Casing - Circular

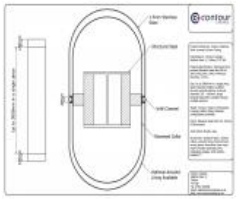

Stainless Steel Column Casing - Lozenge

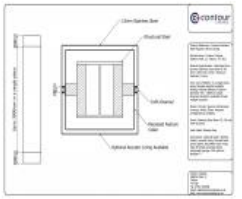

Stainless Steel Column Casing - Square / Rectangle

DWG

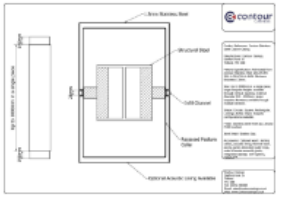

Stainless Steel Column Casing - Rectangle

Rimex casings

Overview

Rimex metal column casings are a vast range of dynamic surface finished solutions, developed to provide vibrant finishes for design-led projects.

This exciting range is at the forefront of metal surface finishing technology and allows designers to realise their most unique and innovative creations, delivering a product of real character with superb, hard-wearing qualities.

Patterned, textured, reflective and custom-etched options present an almost limitless array of modern design options.

Rimex finishes can work in conjunction with MetalArt™, a state-of-the-art surface finishing technology. This allows almost any custom design, logo or illustration to be etched, bead blasted or coloured on to a column casing.

Rimex Pinstripe

Rimex Blue Pampas

Rimex Squares

Rimex Red 10WG

Rimex 6WL

Rimex Bronze Pearl

MetalArt™ is a trademark of Rimex Metals (UK) Ltd

Rimex casings

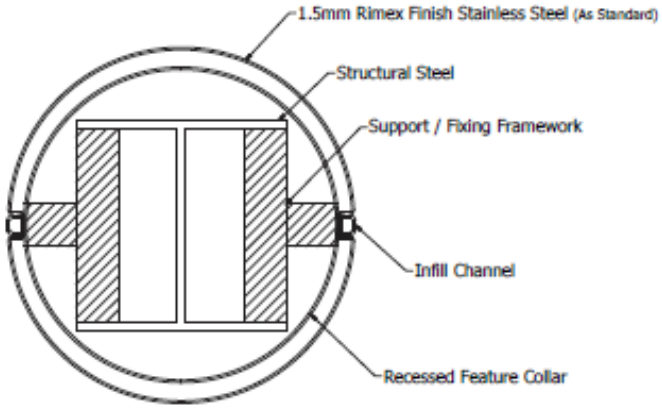

Technical specifications:

Manufacture

Available in a range of surface finished stainless steel and aluminium metals, Rimex finishes are available with a skin of 1.5 – 3mm.

Supplied in sections of up to 3m, an additional internal support structure can be designed for large diameter column casing configurations consisting of more than 2 sections.

The jointing arrangement is a 28mm recess which can be left open or infilled with either a black feature gasket or metal to match the casing finish.

All stainless steel used conforms to EN 10088 & BS EN 10259.

Application
Equally suited to both interior and exterior locations, the Rimex column casing system is available in a range of standard and bespoke shapes and sizes.

Finish options
Rimex casings are available in a range of textured, coloured and patterned finished metals.

Fire performance
The Rimex column casing range is fabricated from ferrous and non-ferrous metals; they are non-combustible and achieve a Class 'O' spread of flame to BS 476-4 standard.

Key characteristics
- Unlimited design flexibility
- Durable construction
- Exceptional aesthetic qualities

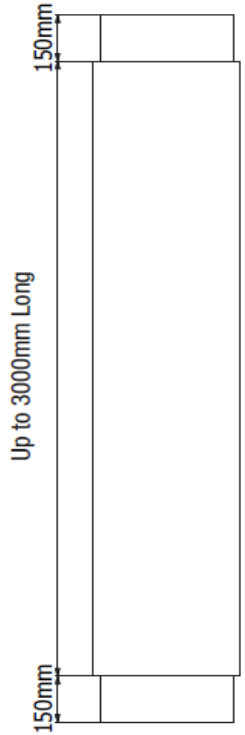

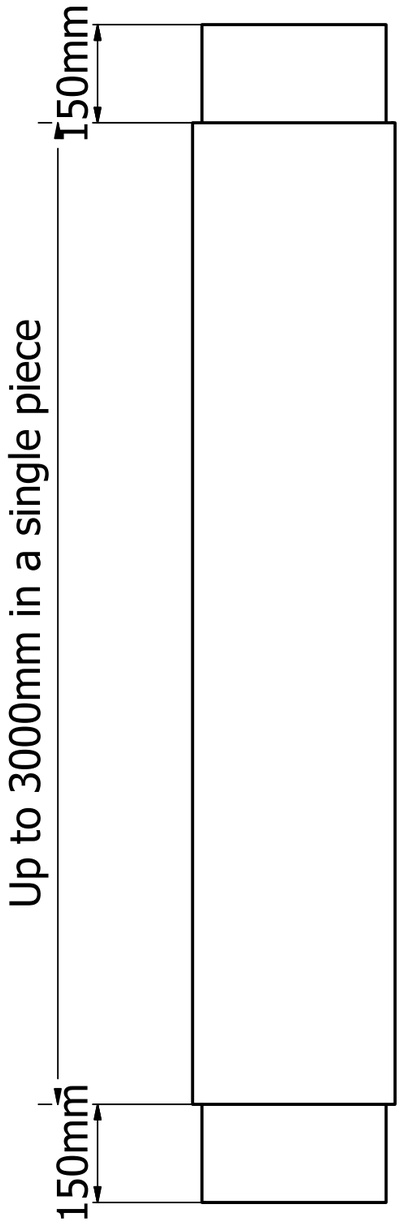

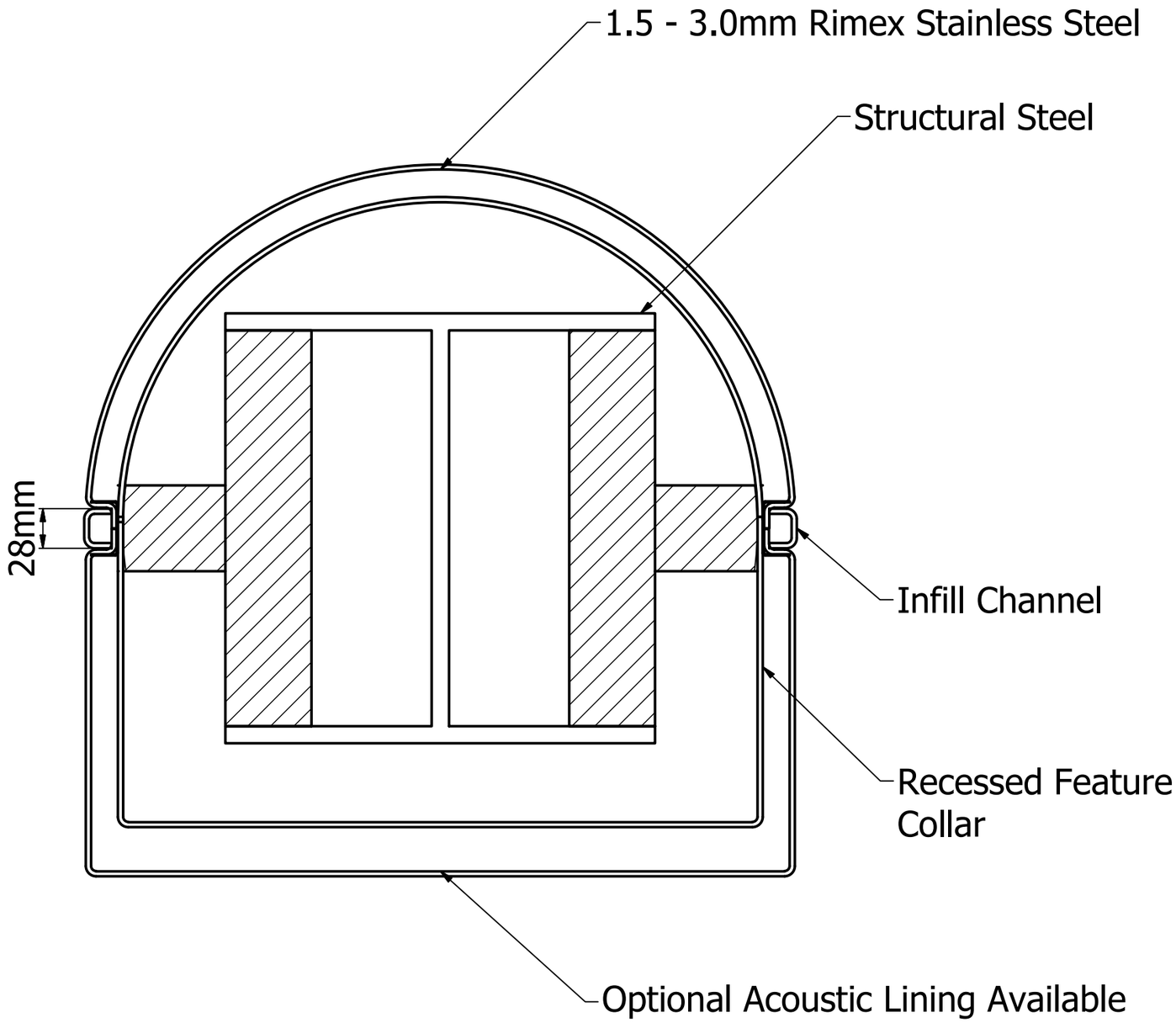

Product Reference: Contour Rimex Stainless Steel Column Casing.

Manufacturer: Contour Casings,
Stafford Park 15
Telford, TF3 3BB

Material Specification: Fabricated from pressed Stainless Steel alloy BS EN 304-1.4301/316-1.4401/430-1.4016 Minimum thickness 1.5mm.

Size: Up to 3000mm in a single piece, larger bespoke heights available through vertical stacking. External diameter 250 - 1000mm, larger bespoke diameters available though multiple sections.

Shape: Circular, Square, Rectangular, Lozenge, Bullet, Elipse. Bespoke configurations available.

Finish: Pattened, Polished, Coloured, MetalArt™

Joint Detail: Shadow Gap.

Accessories: Optional head / skirting collars, acoustic lining, thermal foam, access panel, decorative outer rings, male & female assembly joints, integrated signage, DDA options, MetalArt™.

Contour Casings
Stafford Park 15
Telford
TF3 3BB
Tel: 01952 290498
Email: sales@contourcasings.co.uk
Web: www.contourcasings.co.uk

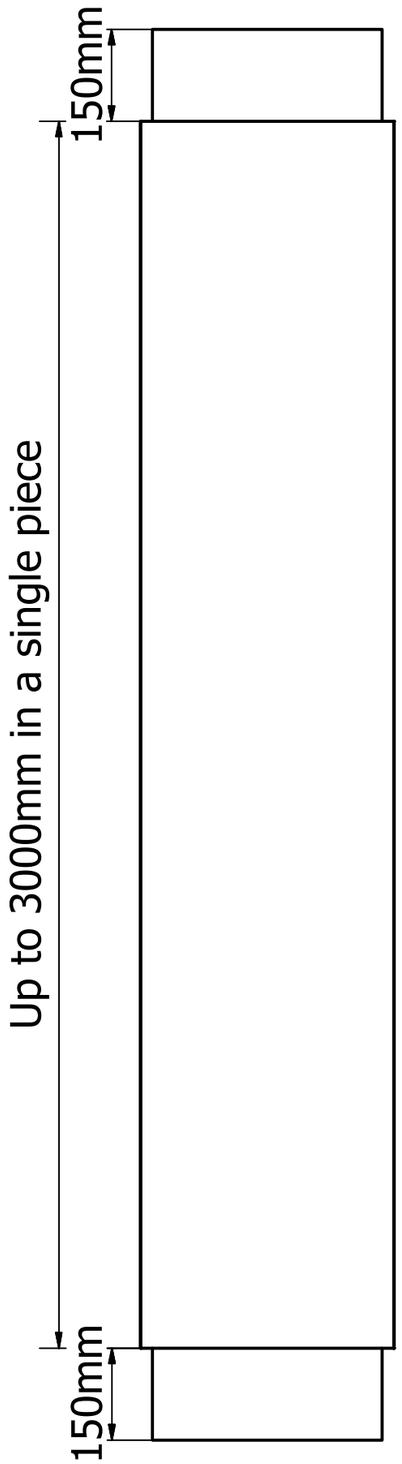

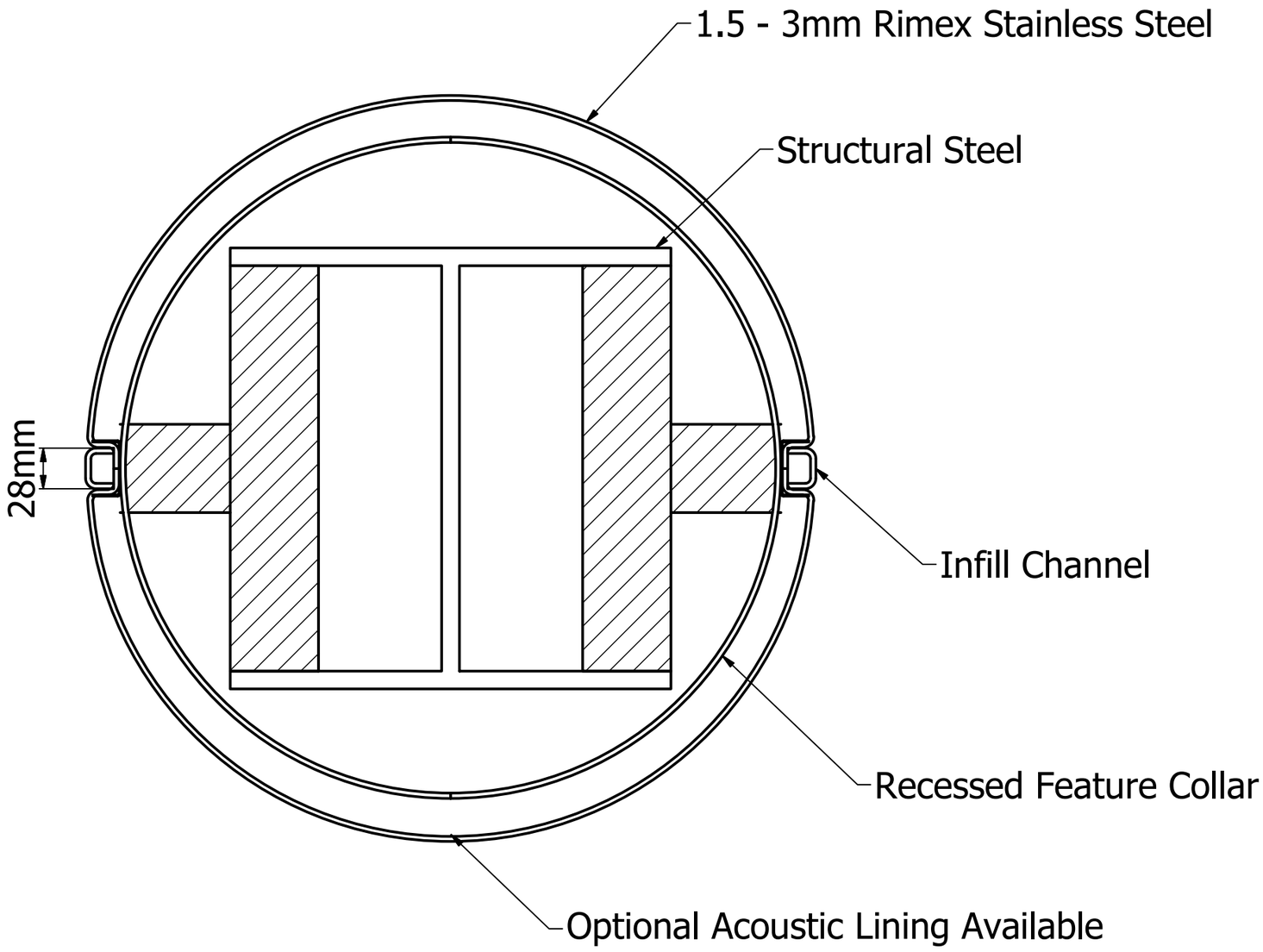

Product Reference: Contour Rimex Stainless Steel Column Casing.

Manufacturer: Contour Casings,
Stafford Park 15
Telford, TF3 3BB

Material Specification: Fabricated from pressed Stainless Steel alloy BS EN 304-1.4301/316-1.4401/430-1.4016 Minimum thickness 1.5mm.

Size: Up to 3000mm in a single piece, larger bespoke heights available through vertical stacking. External diameter 250 - 1000mm, larger bespoke diameters available though multiple sections.

Shape: Circular, Square, Rectangular, Lozenge, Bullet, Elipse. Bespoke configurations available.

Finish: Pattened, Polished, Coloured, MetalArt™

Joint Detail: Shadow Gap.

Accessories: Optional head / skirting collars, acoustic lining, thermal foam, access panel, decorative outer rings, male & female assembly joints, integrated signage, DDA options, MetalArt™.

Contour Casings
Stafford Park 15
Telford
TF3 3BB
Tel: 01952 290498
Email: sales@contourcasings.co.uk
Web: www.contourcasings.co.uk

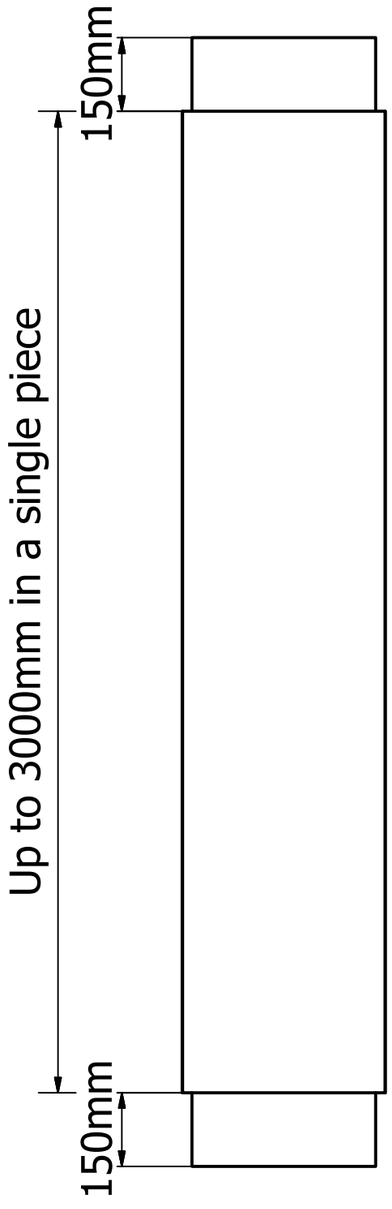

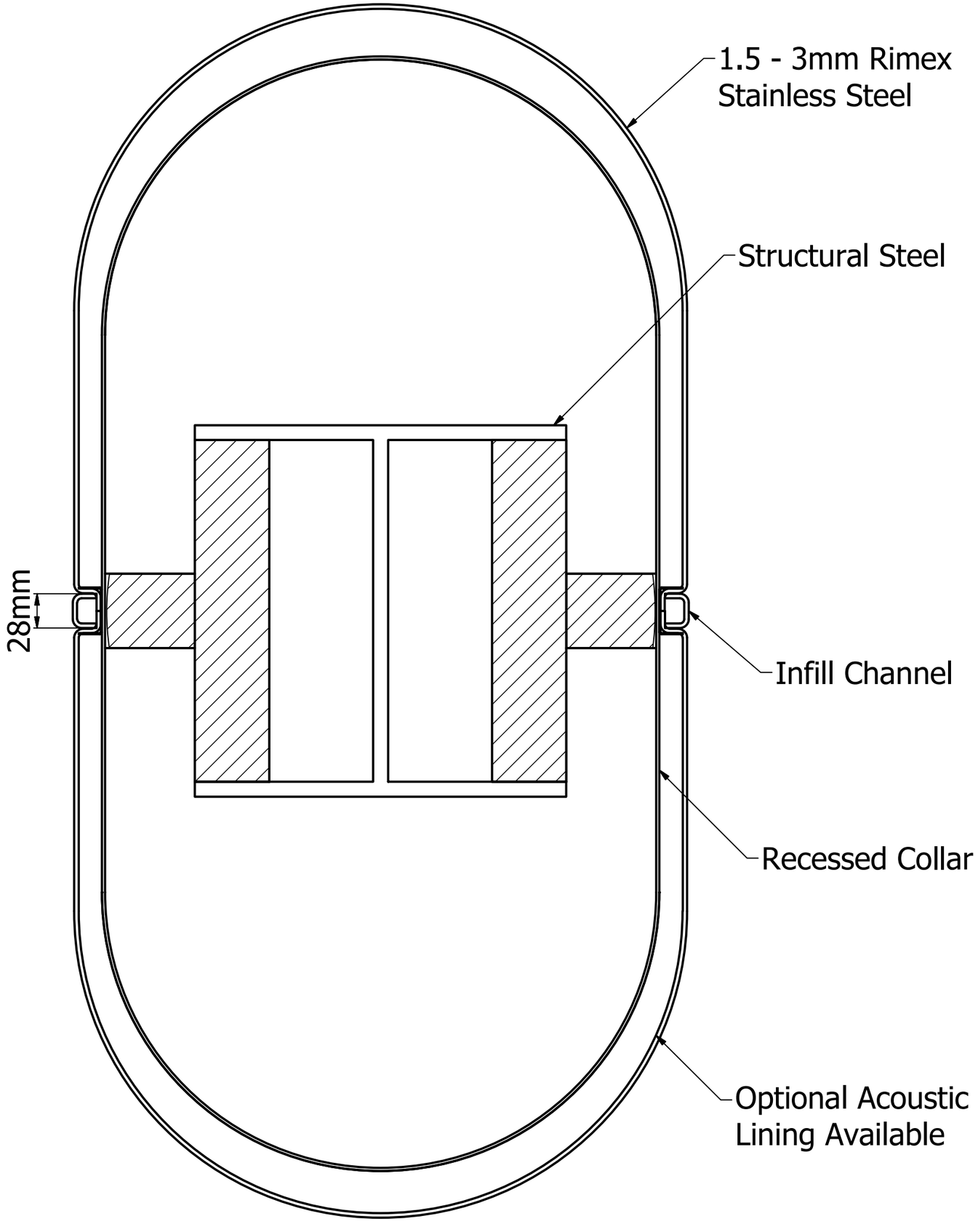

1.5 - 3mm Rimex Stainless Steel

Structural Steel

Infill Channel

Recessed Collar

Optional Acoustic Lining Available

Product Reference: Contour Rimex Stainless Steel Column Casing.

Manufacturer: Contour Casings, Stafford Park 15 Telford, TF3 3BB

Material Specification: Fabricated from pressed Stainless Steel alloy BS EN 304-1.4301/316-1.4401/430-1.4016 Minimum thickness 1.5mm.

Size: Up to 3000mm in a single piece, larger bespoke heights available through vertical stacking. External diameter 250 - 1000mm, larger bespoke diameters available though multiple sections.

Shape: Circular, Square, Rectangular, Lozenge, Bullet, Elipse. Bespoke configurations available.

Finish: Pattened, Polished, Coloured, MetalArt™

Joint Detail: Shadow Gap.

Accessories: Optional head / skirting collars, acoustic lining, thermal foam, access panel, decorative outer rings, male & female assembly joints, integrated signage, DDA options, MetalArt™.

Contour Casings
Stafford Park 15
Telford
TF3 3BB
Tel: 01952 290498
Email: sales@contourcasings.co.uk
Web: www.contourcasings.co.uk

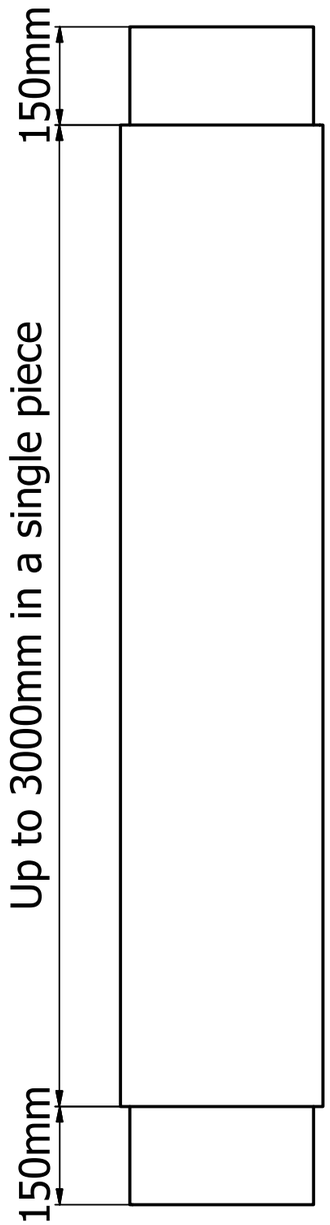

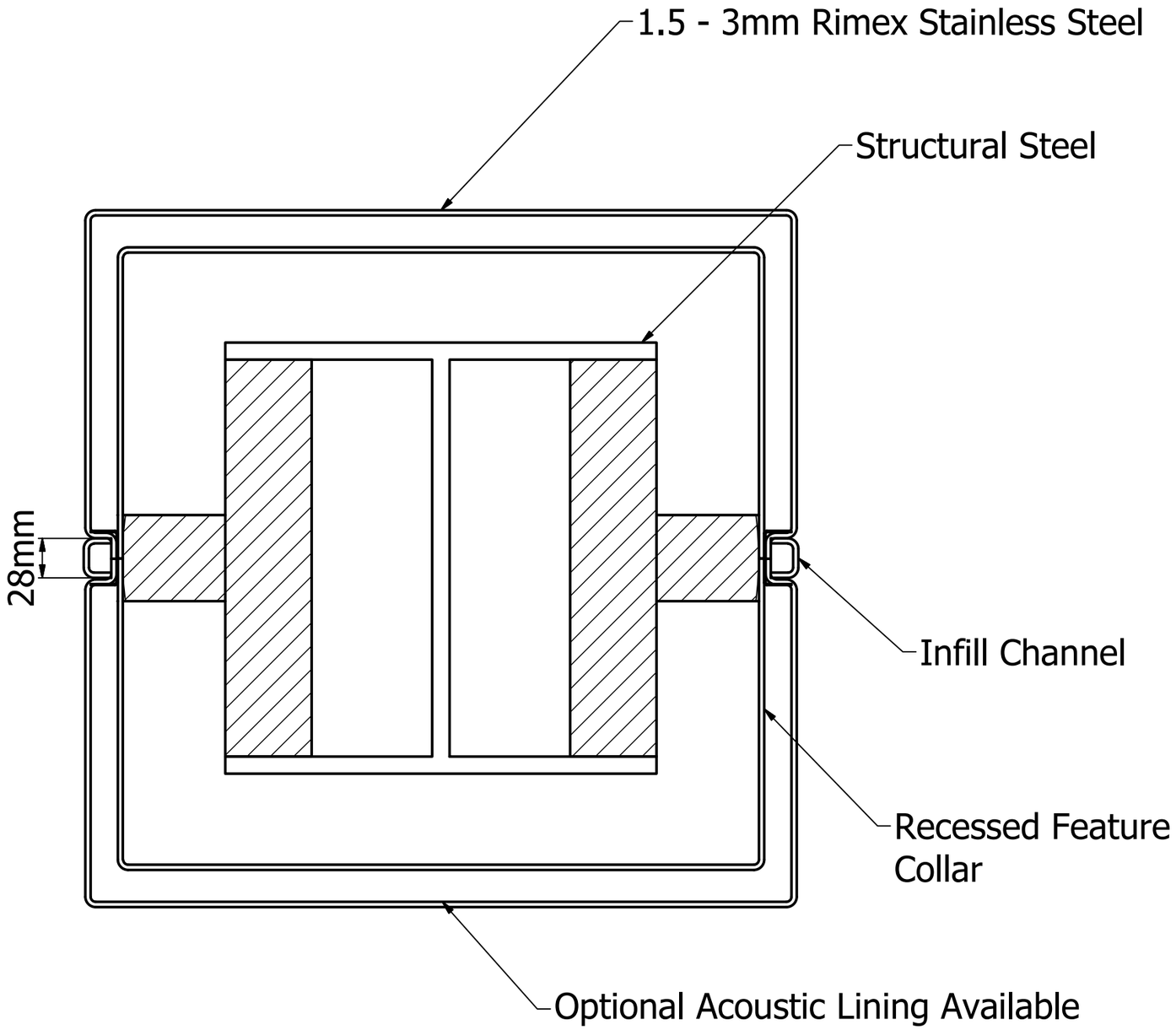

Product Reference: Contour Rimex Stainless Steel Column Casing.

Manufacturer: Contour Casings, Stafford Park 15 Telford, TF3 3BB

Material Specification: Fabricated from pressed Stainless Steel alloy BS EN 304-1.4301/316-1.4401/430-1.4016 Minimum thickness 1.5mm.

Size: Up to 3000mm in a single piece, larger bespoke heights available through vertical stacking. External diameter 250 - 1000mm, larger bespoke diameters available though multiple sections.

Shape: Circular, Square, Rectangular, Lozenge, Bullet, Elipse. Bespoke configurations available.

Finish: Pattened, Polished, Coloured, MetalArt™

Joint Detail: Shadow Gap.

Accessories: Optional head / skirting collars, acoustic lining, thermal foam, access panel, decorative outer rings, male & female assembly joints, integrated signage, DDA options, MetalArt™.

Contour Casings
Stafford Park 15
Telford
TF3 3BB
Tel: 01952 290498
Email: sales@contourcasings.co.uk
Web: www.contourcasings.co.uk

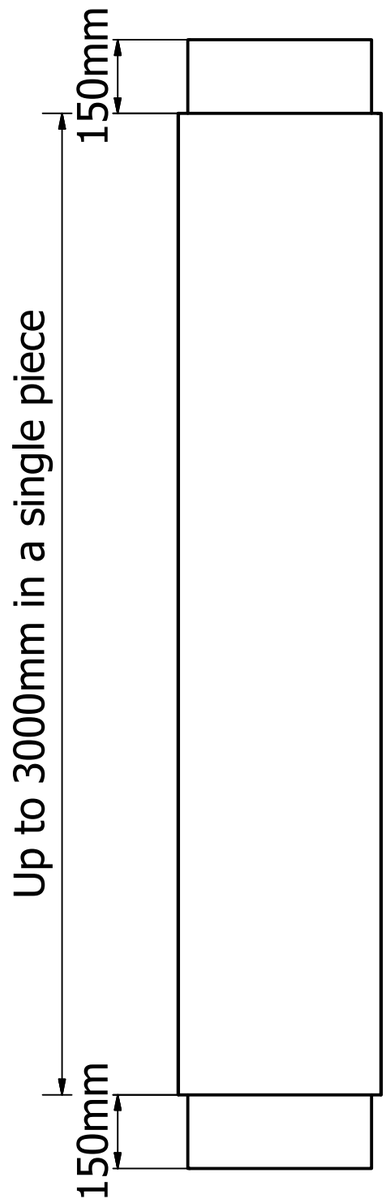

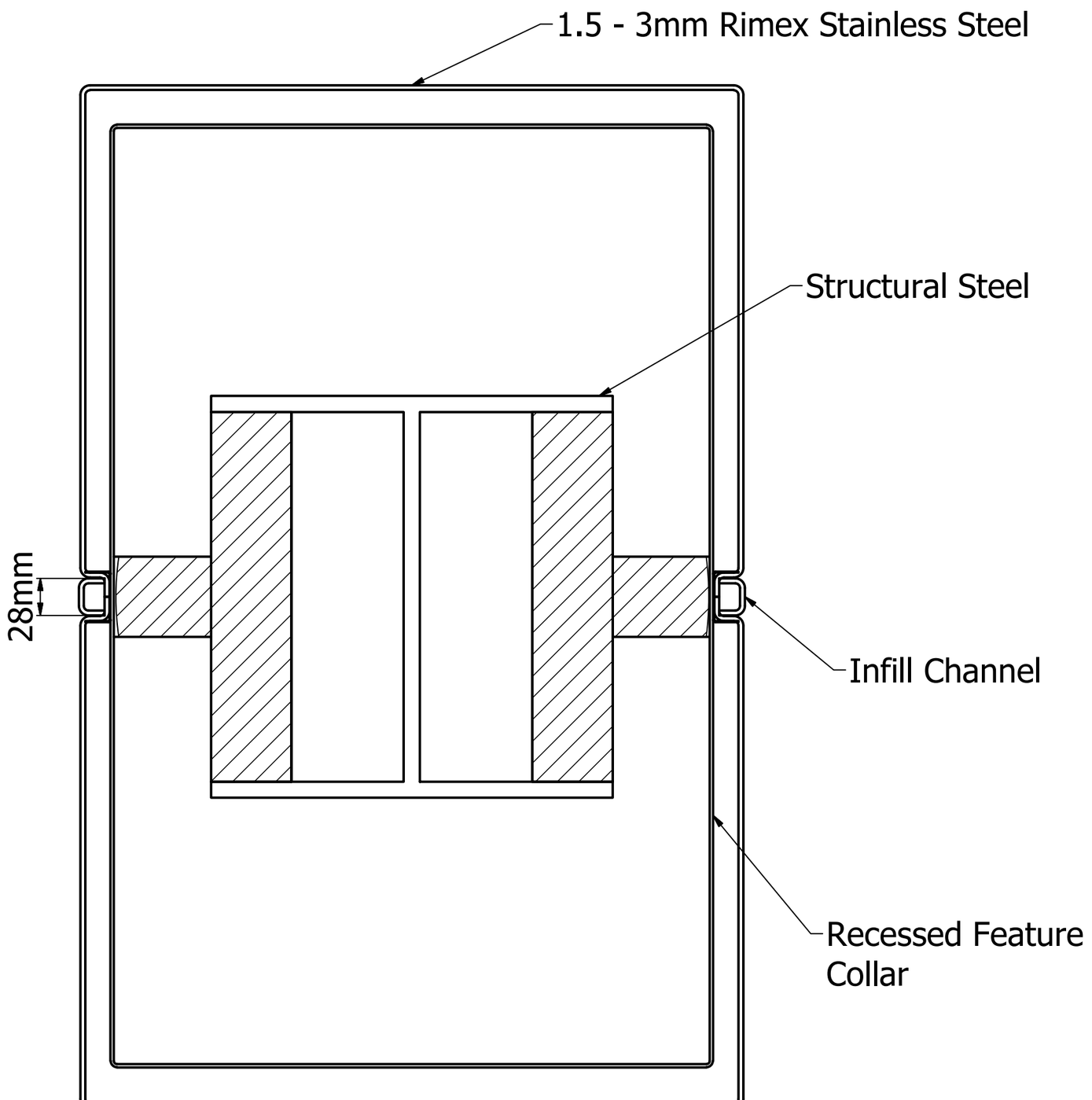

Product Reference: Contour Rimex Stainless Steel Column Casing.

Manufacturer: Contour Casings,
Stafford Park 15
Telford, TF3 3BB

Material Specification: Fabricated from pressed Stainless Steel alloy BS EN 304-1.4301/316-1.4401/430-1.4016 Minimum thickness 1.5mm.

Size: Up to 3000mm in a single piece, larger bespoke heights available through vertical stacking. External diameter 250 - 1000mm, larger bespoke diameters available though multiple sections.

Shape: Circular, Square, Rectangular, Lozenge, Bullet, Elipse. Bespoke configurations available.

Finish: Pattened, Polished, Coloured, MetalArt™

Joint Detail: Shadow Gap.

Accessories: Optional head / skirting collars, acoustic lining, thermal foam, access panel, decorative outer rings, male & female assembly joints, integrated signage, DDA options, MetalArt™.

Contour Casings
Stafford Park 15
Telford
TF3 3BB
Tel: 01952 290498
Email: sales@contourcasings.co.uk
Web: www.contourcasings.co.uk

Rimex casings – BIM objects & DWG files

Rimex Column Casing - Bullet

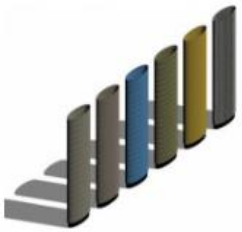

Rimex Column Casing - Circular

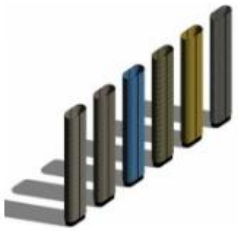

Rimex Column Casing - Ellipse

Rimex Column Casing - Lozenge

Rimex Column Casing - Square / Rectangular

BIM

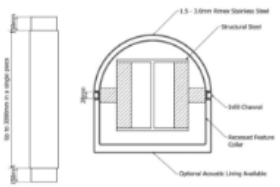

Rimex Column Casing - Bullet

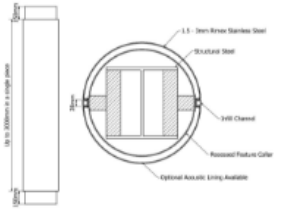

Rimex Column Casing - Circular

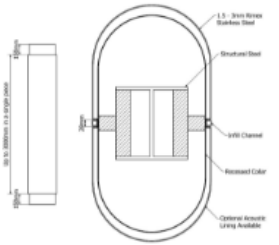

Rimex Column Casing - Lozenge

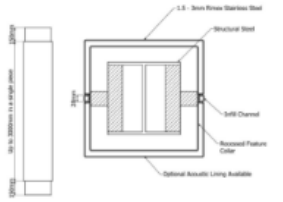

Rimex Column Casing - Square / Rectangle

DWG

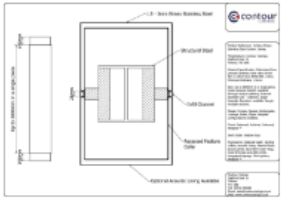

Rimex Column Casing - Rectangle

Bespoke options

Access panels
Access panels can be programmed into manufacture, allowing easy access to be gained to internal services for cleaning and maintenance.

Cut-outs
Cut-outs can be programmed into manufacture, delivering a neat finish and fast installation.

Bump rails
Contour offers bump rails to suit all column casing options, including bespoke and standard ranges. Bump rail finishes include stainless steel and PPC aluminium in any RAL or BS colour.

Sloping collars
Where a column casing meets a gradient ceiling,

DDA banding
An integrated banding detail is offered to contrast against the column casing body, aiding individuals with impaired sight and complying with the Equality Act 2010.

BioCote®
anti-microbial protection

BioCote® is a coating that is proven to significantly reduce the presence of harmful bacteria and pathogens on treated surfaces, by up to 99.5%.

As a patented optional additive to our powder coating, BioCote provides an effective, safe and long lasting solution to combating a wide range of bacteria, including MRSA and E.coli.

BioCote is ideal for application to casings which will be used in healthcare, food processing & preparation and pharmaceutical manufacturing environments – indeed anywhere where the maintenance of rigorous hygiene standards is critical.

Contour are exclusive partners with BioCote in the UK when it comes to the application of the additive technology on our safe surface temperature heating products, architectural fabrications and column casings.

For more information on BioCote, visit www.biocote.com .

BioCote®

Case study:
Kirkgate Market, Leeds

PROJECT:	**Kirkgate Market, Leeds City Centre**
ARCHITECT:	**IBI Taylor Young**
MAIN CONTRACTOR:	**Interserve**
SUMMARY:	**Manufacture and installation of aluminium column casings, including development of a bespoke internal fixing system.**

Leeds City Council has undertaken a £13.7m refurbishment of the famous Kirkgate market. The most dramatic changes have taken place in the '1976' Hall which has been transformed into a unique central meeting point for shoppers.

A key part of this transformation was the use of vibrantly coloured walls and fixtures, including 4.5m high column casings that encircle floor to roof I beams, positioned above catering units in the hall.

Critically Contour developed a bespoke system of attaching the casings to the I beams as the roofs of the catering units were effectively non weight bearing and could not be used to support the column casings.

READ MORE AND DOWNLOAD A PDF OF THIS CASE STUDY

Case study:
Yorkshire Event Centre

PROJECT:	**Yorkshire Event Centre, Harrogate**
ARCHITECT:	**P+HS Architects**
MAIN CONTRACTOR:	**Clugston Construction**
SUMMARY:	**Design, manufacture & installation of elliptical aluminium column casings.**

The Centre's new hall's external entrance area includes 5 imposing structural columns nearly 8m tall and each composed of Circular Hollow Sections (CHS). Each required encasement not only for aesthetic purposes but also to protect drainage pipework.

However before these could be created, the issue of how these could be affixed to the CHS without affecting the integrity had to be addressed.

WATCH A VIDEO OF THE MANUFACTURE OF A COLUMN CASING FOR THIS PROJECT

READ MORE AND DOWNLOAD A PDF OF THIS CASE STUDY

Case study:
The Wing Building, Battle of Britain Memorial

PROJECT:	**Battle of Britain Memorial Trust**
ARCHITECT:	**Godden Allen Lawn**
MAIN CONTRACTOR:	**EPPS Construction**
SUMMARY:	**Design and manufacture of 25 column casings. Internal column casings feature an angled sloping top.**

This eye-catching building was designed with the pitch of the roof to mirror the angle of a Spitfire's wing.

Contour were specified to design and manufacture of a varied selection of products - 25 column casings; 17 internal each in 2 colours and supplemented with 8 external column casings.

Critically the pitch of the roof required that many of the internal column casings be created with a 5 degree angled sloping top.

The difficulty factor was compounded by the building's location close to a shore line environment which could adversely affect the external column casings.

READ MORE AND DOWNLOAD A PDF OF THIS CASE STUDY

Case study:
Banff & Buchan College

PROJECT:	**Banff & Buchan College, Aberdeenshire**
ARCHITECT:	**CDA Group**
MAIN CONTRACTOR:	**Robertsons**
SUMMARY:	**Supply 88 PPC aluminium column casings.**

As part of a multi-million pound project and one of the most significant educational developments in Scotland for many years, Contour was chosen to supply 88 PPC aluminium column casings to Banff & Buchan College, Aberdeenshire.

The column casings, with feature capping detail and in heights of up to 6m, are located in a bright, modern, double-height atrium, as well as contemporary coffee area and learning resource zone.

WATCH THE VIDEO OF THIS CASE STUDY

READ MORE AND DOWNLOAD A PDF OF THIS CASE STUDY

Case study:
Sevenoaks Railway Station

PROJECT:	**Sevenoaks Railway Station**
CLIENT:	**Southeastern Rail**
MAIN CONTRACTOR:	**Mansell Construction**
SUMMARY:	**Supply & install of PPC column casings with a DDA banding.**

The Equality Act 2010 made it unlawful for service providers to discriminate against people using education or transport facilities, in respect of their disabilities. In light of this legal obligation, Contour developed a pioneering column casing system designed to satisfy legislation when operating in these sectors.

Contour developed a column casing solution for Sevenoaks Railway Station, which features an integrated banding detail designed to contrast against the column casing body, making it more visible to individuals with impaired sight.

READ MORE AND DOWNLOAD A PDF OF THIS CASE STUDY

Case study:
Central Arcade, Leeds

PROJECT:	**Central Arcade retail development**
CLIENT:	**Leeds City Council**
MAIN CONTRACTOR:	**Jordans Construction**
SUMMARY:	**Design and manufacture circular and square stainless steel column casings, including black decorative collars.**

Central Arcade in Leeds City Centre utilised a number of robust, low maintenance and striking stainless steel column casings to combine Leeds's heritage for Victorian arcades with a clean, contemporary look.

The column casings supplied by Contour in a range of shapes and sizes, were specified to compliment architectural trends in this major design-led retail scheme.

The 100% sustainable square and circular column casing are located in a bright, double-height atrium, capped with an expansive glass roof which floods the space with natural light.

READ MORE AND DOWNLOAD A PDF OF THIS CASE STUDY

Spaceoasis®

Contour has partnered with award-winning modular furniture experts, Spaceoasis®, to develop a range of specifically designed, flexible furniture solutions which can optimise the 'dead space' around columns.

The range seamlessly integrates Contour's column casing solutions with design-focused furniture.

Designers can now breathe new life into tired and under-utilised spaces, combining high levels of customisation with robust build quality.

These modular furniture systems can be adapted to create any desired mood in any required location. Innovative designs allow building services to be neatly hidden, delivering a unique way of channelling power sockets, telephone cables and internet lines to any location.

For more information on Spaceoasis click here

For further information visit:

www.contourcasings.co.uk

Or call the Contour Sales Team on 01952 290498

contour

© 2017 Contour Casings Limited. Acceptance of orders is subject to Contour Casings Limited standard terms & conditions.
Copy available upon request or see www.contourcasings.co.uk/terms-conditions/. E&OE.