CI/SfB	(23.79)	Et6	
May 2016			

Thermally Insulated Balcony Connectors

for the Construction Industry

BS EN 1090-1

Ancon®
BUILDING PRODUCTS

Thermally Insulated Balcony Connectors

High integrity structural solutions to minimise cold bridging and its associated issues

Energy efficiency is becoming increasingly important in today's sustainable building designs and the thermal performance of the building envelope is a key design consideration.

At the same time, architects are looking to create stylish, aesthetically appealing, mixed-use developments that combine high density occupancy with accessible outdoor space. Balconies often provide the answer, but as they typically pass through the building envelope, the fixing detail requires special attention to minimise thermal bridging and its various consequences.

Thermal bridges occur where the insulation layer is penetrated by a material with a relatively high thermal conductivity. In the past, balconies have been constructed by such methods as simply extending the concrete floor as a continuous protruding slab or using steel brackets fixed directly to the structure. These methods result in local heat losses and higher energy use. Cold internal surface temperatures can also cause condensation and mould growth, resulting in potentially harmful living conditions for residents. In extreme cases, buildings are condemned as remedial action can be unsuccessful.

Ancon's thermally insulated connectors minimise heat loss at balcony locations while maintaining structural integrity.

They provide a thermal break by inserting a material with a low thermal conductivity between elements with a higher conductivity and most also provide local insulation at the joint.

As a critical structural component, they transfer moment, shear, tension and compression forces.

Standard solutions are available for concrete-to-concrete, steel-to-concrete and steel-to-steel applications.

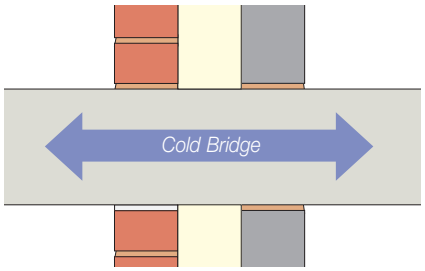

Example thermal bridge at a concrete balcony location

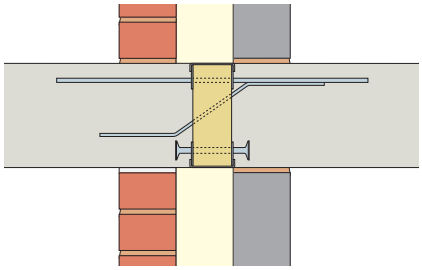

Ancon Isotec thermally insulated balcony connector

CE Marking

Construction products which fall within the scope of a harmonised European Standard should carry CE marking under the EU Construction Products Regulation. For steel fabrications like the Ancon STC or Ancon STS balcony connector, the harmonised standard is BS EN 1090-1 Execution of steel structures and aluminium structures: Requirements for conformity assessment of structural components. Ancon complies with all CE marking requirements of this standard including designs to EN 1993 (Eurocode 3) and external certification of our factory production controls by an approved body.

Contents

The Ancon Range of Balcony Connectors 4-5

Isotec Concrete-to-Concrete Connectors 6-11

Isolan Concrete-to-Concrete Connectors 12-21

STC Steel-to-Concrete Connectors 22-31

STS Steel-to-Steel Connectors 32-34

Other Ancon Products 35

THE QUEEN'S AWARDS FOR ENTERPRISE: INNOVATION 2012

THE QUEEN'S AWARDS FOR ENTERPRISE: INTERNATIONAL TRADE 2015

- Minimise heat loss & energy use
- Proven through thermal modelling
- Reduce risk of condensation & mould growth
- Transfer moment, shear, tension & compression forces
- For concrete & steel constructions
- CE marked to BS EN 1090-1 (STS/STC)
- CPD seminars available
- Product information in NBS format
- Animated installation videos
- ISO 9001, ISO 14001 & OHSAS 18001

Ancon® BUILDING PRODUCTS

Thermally Insulated Balcony Connectors

Ancon Isotec

For Concrete-to-Concrete Applications

Isotec is a high performance thermal break system for concrete-to-concrete applications.

Each unit is manufactured as a non-deformable cage offering high rigidity and dimensional stability. The insulation component comprises Rockwool® mineral wool that offers inherent fire-resistant qualities. All reinforcement and metal components are manufactured from stainless steel which offers improvements in both thermal efficiency and corrosion resistance over carbon steel systems. An additional benefit is the use of short compression studs instead of compression bars which offer greater concrete design flexibility and simplify installation.

This system is available in a number of different shapes and sizes to cater for a wide range of applications. It is particularly beneficial in highly energy efficient structures, heavily congested or stepped floor slabs, applications where maximum corrosion protection is required and when an integral fire resistance is preferred to the installation of a separate fire protection barrier.

Isotec has been thoroughly and independently tested by the French CSTB and holds Avis Technique Number 20/11-232.

See pages 6-11

Ancon Isolan

For Concrete-to-Concrete Applications

Isolan is a simple, cost-effective thermal break system for most concrete-to-concrete applications. It provides continuity to both the wall insulation and the slab reinforcement. Standard systems, comprising rigid CFC-free polystyrene insulation and stainless steel shear reinforcement, suit a minimum slab depth of 160mm.

The Isolan system uses conventional reinforcing bars to provide the tension and compression reinforcement. When compared to systems where this reinforcement is an integral and fixed component, Isolan can provide substantial cost savings and simplify specification, scheduling, transportation, handling and installation.

Fire protection can be incorporated into the system by adding fire resistant strips to the unit.

The MV system is used for the transfer of moment and shear forces in cantilevered balconies and the V system is used for the transfer of shear forces in simply supported balconies.

The Isolan system has undergone independent testing at EMPA; the Swiss Federal Laboratories for Materials Science and Technology.

See pages 12-21

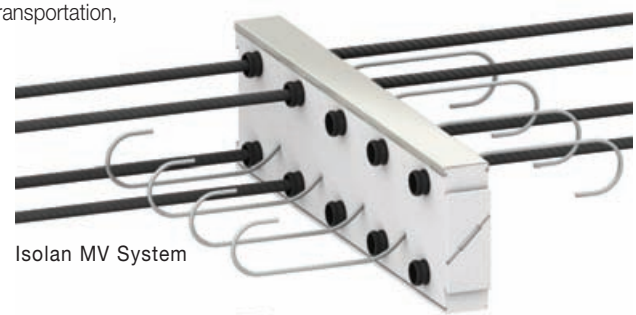

Isolan MV System

Isolan V System

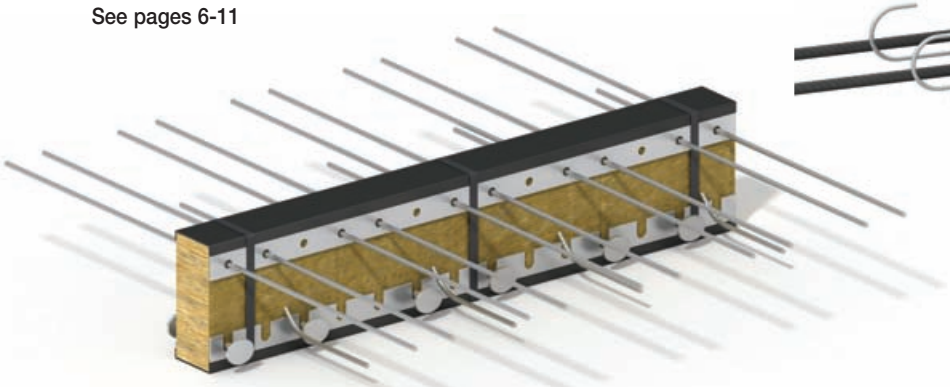

Isotec MV System

Ancon STC

For Steel-to-Concrete Applications

The STC system is used for anchoring steel balconies to concrete floor slabs and has been proven through thermal modelling to reduce heat loss when compared to direct connections.

The two part assembly, comprising a cast-in anchorage and a post-fixed bracket with thermal pad located at the interface, allows for phased construction, reducing the risk of the units being damaged during the construction process.

Manufactured to order, the bracket depth can be designed to suit the exact requirements of the application and avoid conflicts with the external cladding.

Serrated pads and slots provide adjustability in the final bracket position without the need for stop butts or levelling shims.

Anchor bars are Grade B500B and are supplied fixed to Duplex stainless steel couplers and a stainless steel nail plate.

The fabricated brackets are manufactured from hot-dip galvanised S355 plain carbon steel as standard and can be supplied in stainless steel for applications requiring enhanced corrosion protection, such as coastal areas. They are designed to EN 1993 (Eurocode 3) and CE-marked to EN 1090 Part 1.

See pages 22-31

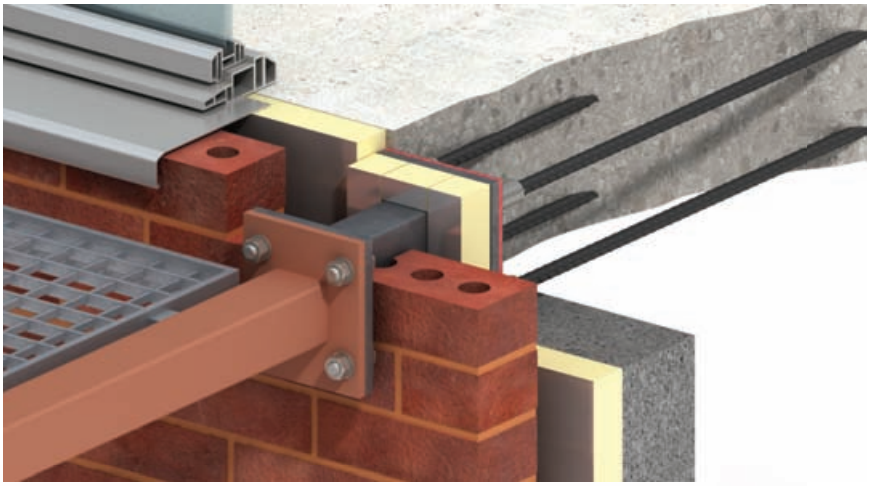

STC System

Ancon STS

For Steel-to-Steel Applications

The STS system is a compact thermal break, typically used for connecting steel balconies to structural steel frames but is equally suitable for other steel-to-steel applications. It is available in three standard stud sizes to accommodate a wide range of loads. Manufactured to order, the vertical centres of the fixing studs can be specified to suit the exact requirements of the application. Thermal modelling of a typical STS application showed a reduction in heat loss of almost 50% compared to a direct steel connection.

The STS connector comprises tension and compression components within a single combined and compact unit, wrapped in polystyrene insulation. It features four A4 stainless steel fixing studs and a thermoset plate is located at each steel interface. The fabricated compression component is supplied in hot dipped galvanised steel as standard and can be supplied in stainless steel on request.

STS connectors are designed to EN 1993 (Eurocode 3) and CE marked to BS EN 1090 Part 1.

See pages 32-34

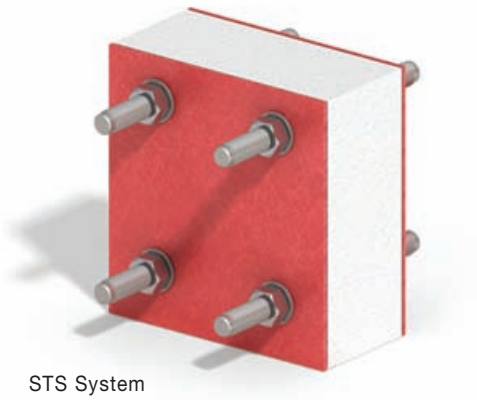

STS System

Construction Applications

Most of the illustrations in this literature show masonry cavity walls with brick cladding as this build method is common in the UK, however the Ancon range is suitable for many forms of construction including direct insulated render and rainscreen cladding. Contact Ancon with details of your specific application.

Product Selection Grid

		Structural Frame	
		Concrete	Steel
Balcony	Concrete	Isolan or Isotec	Contact Ancon
	Steel	STC	STS

Thermally Insulated Balcony Connectors

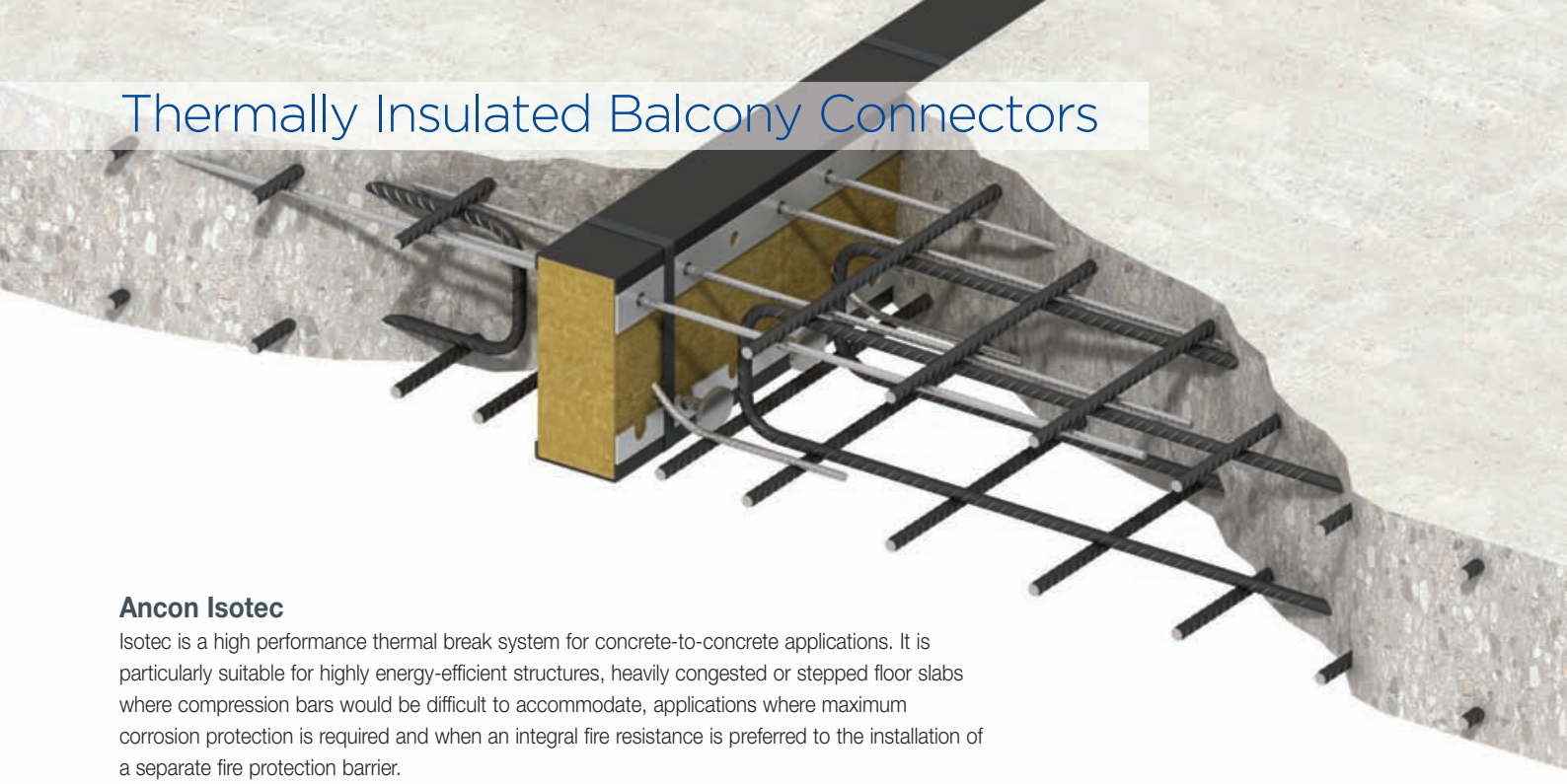

Ancon Isotec

Isotec is a high performance thermal break system for concrete-to-concrete applications. It is particularly suitable for highly energy-efficient structures, heavily congested or stepped floor slabs where compression bars would be difficult to accommodate, applications where maximum corrosion protection is required and when an integral fire resistance is preferred to the installation of a separate fire protection barrier.

Each unit is manufactured as a non-deformable cage offering high rigidity and dimensional stability.

System Benefits

- ✓ Inherently fire-resistant mineral wool insulation
- ✓ Compression studs reduce rebar congestion and simplify installation
- ✓ Continuous stainless steel reinforcement maximises strength, thermal efficiency and corrosion protection
- ✓ Supplied as a complete unit providing rigidity and dimensional stability
- ✓ Extensive product line to suit a wide range of applications
- ✓ Independently assessed by CSTB

Reinforcement

Tensile and shear reinforcement consist of 1.4301 stainless steel with the characteristics of BSt500S. Tensile bars are continuous with no structural welding or point of weakness. Compression studs are manufactured from 12mm diameter, high resistance 1.4301 stainless steel bars with hot-forged heads.

In addition to thermal and durability benefits, stainless steel reinforcement reduces concrete cover requirements and can therefore provide additional design efficiencies over carbon steel systems.

Insulation

Fire-resistant Rockwool® mineral wool insulation is protected by a plastic U-shaped profile top and bottom. A label is affixed to the top identifying the system type and direction of placement.

Thickness:	80mm
Unit Length:	1000mm/330mm
Density:	100 kg/m³ minimum
ψ:	0.3 to 0.18 W/mK (depending on construction)
Fire resistance:	120 minutes as assessed by CSTB

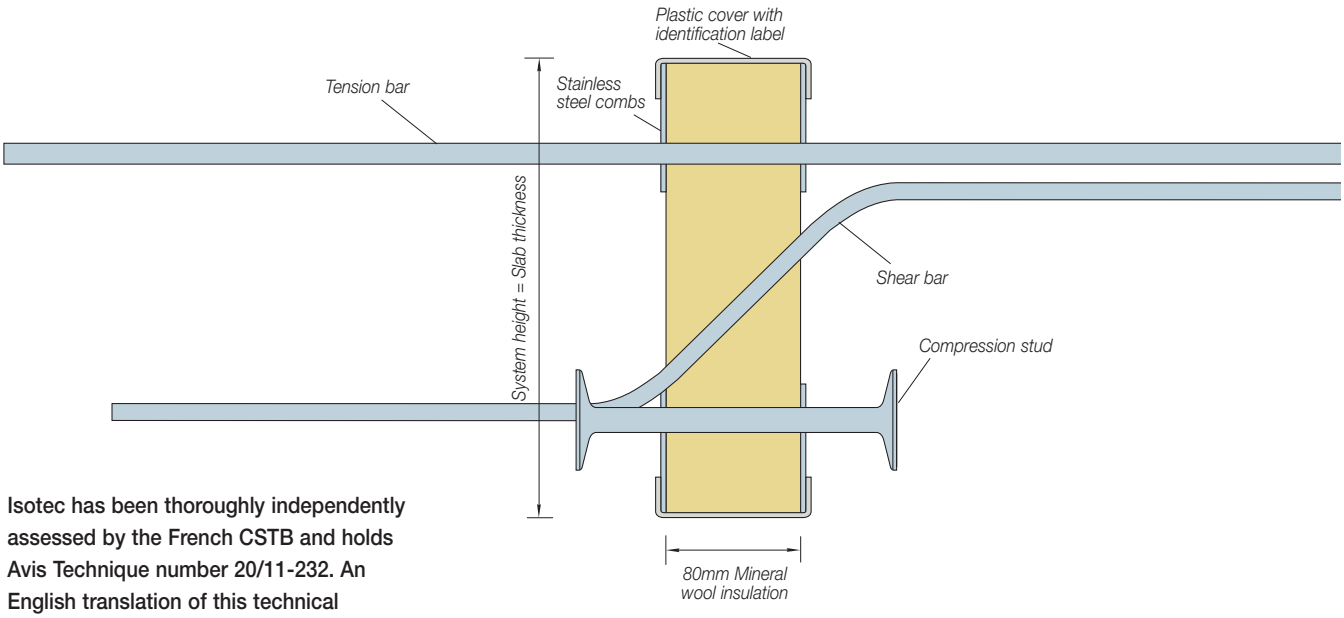

Isotec has been thoroughly independently assessed by the French CSTB and holds Avis Technique number 20/11-232. An English translation of this technical approval document is available on request.

CSTB
le futur en construction

Rockwool is a registered trade mark of Rockwool International A/S

Applications

ISO 80 MV

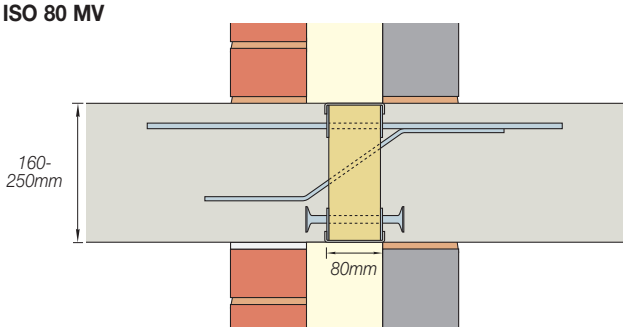

Slab to slab transfer of bending moment and shear forces

ISO 80 types DMV

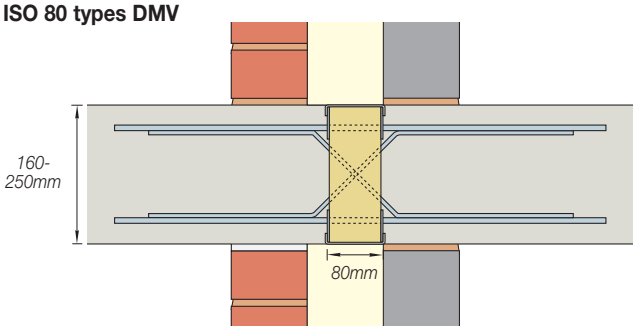

Slab to slab at same level transfer of bending moment and shear forces positive and negative

ISO 80 V types A-D

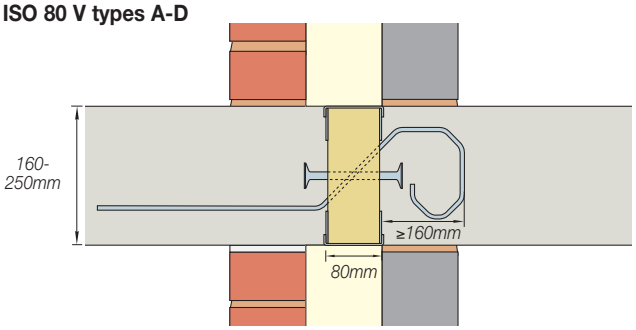

Slab to slab, or slab to wall transfer of shear forces only

ISO 80 V types E-M

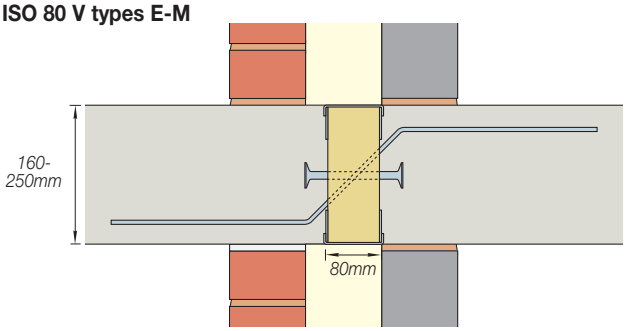

Slab to slab at same level transfer of shear forces only

ISO 80 DV type A-D

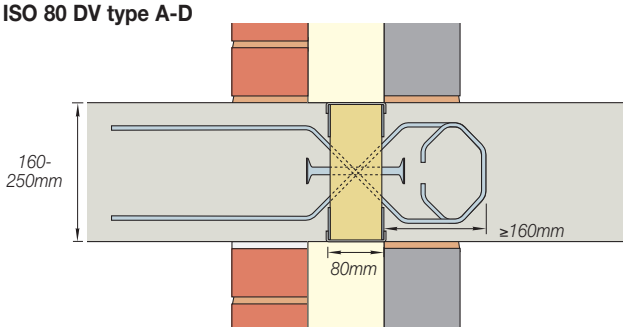

Slab to slab, or slab to wall transfer of shear forces positive and negative

ISO 80 DV type E-M

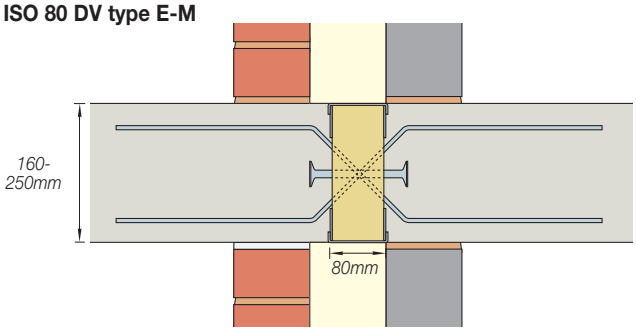

Slab to slab at same level transfer of shear forces positive and negative

Other standard configurations

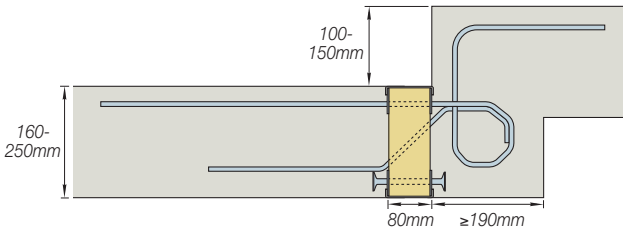

Slab to slab with 100mm or 150mm level difference in slab

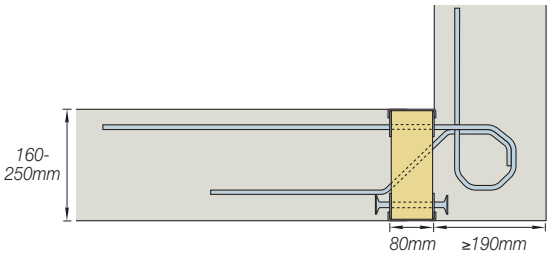

Slab to wall upwards transfer of bending moment and shear forces

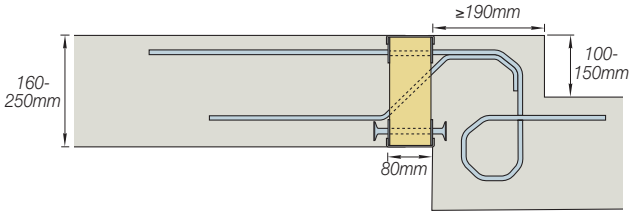

Slab to slab with 100mm or 150mm level difference in slab

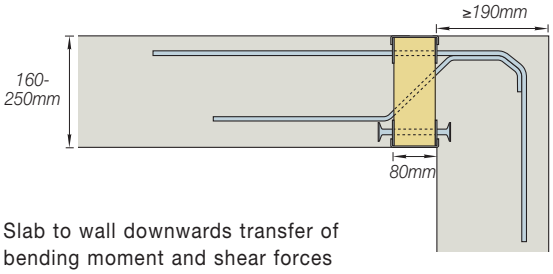

Slab to wall downwards transfer of bending moment and shear forces

Thermally Insulated Balcony Connectors

Design Resistances

Isotec type ISO 80 MV

Isotec Type		A	B		C		D		E		F		G			H			I *	
		MV	MV	MV+	MV	MV+	MV	MV+	MV	MV+	MV	MV+	MV	MV+	MV++	MV	MV+	MV++	MV+	MV++
Tension Bars		4Ø8	6Ø8	6Ø8	8Ø8	8Ø8	10Ø8	10Ø8	6Ø12	6Ø12	8Ø12	8Ø12	10Ø12	10Ø12	10Ø12	12Ø12	12Ø12	12Ø12	14Ø12	14Ø12
Compression Bars		4Ø12	4Ø12	4Ø12	6Ø12	6Ø12	6Ø12	6Ø12	8Ø12	8Ø12	10Ø12	10Ø12	10Ø14	10Ø14	10Ø14	12Ø14	12Ø14	12Ø14	12Ø14	12Ø14
Shear Bars		4Ø6	4Ø6	6Ø6	4Ø6	6Ø6	4Ø8	6Ø8	4Ø8	6Ø8	4Ø8	6Ø8	4Ø8	6Ø8	8Ø8	4Ø8	6Ø8	8Ø8	6Ø8	8Ø8
Ls (mm)		430	430	430	430	430	530	530	680	680	680	680	680	680	680	680	680	680	680	680
Unit Length mm		1000											1000							
		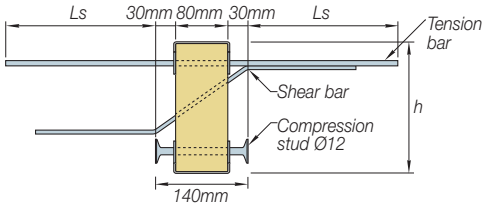											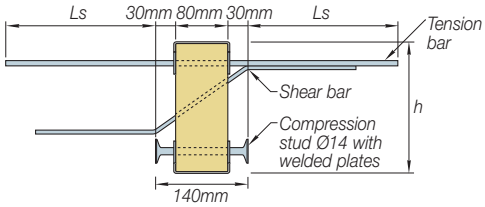							
Design Resistance	Slab Depth h (mm)																			
M_{Rd} (kNm/m)	160	7.66	11.41	11.49	15.16	15.24	20.45	18.75	26.58	26.20	32.84	30.22	40.73	39.61	37.00	48.76	49.05	46.49	-	-
	170	8.37	12.54	12.55	16.70	16.72	22.44	21.20	29.33	29.54	36.59	34.02	45.14	44.52	41.74	54.10	54.29	52.31	-	-
	180	9.36	13.94	14.04	18.53	18.62	24.94	23.69	32.59	32.95	40.59	37.89	50.07	49.51	46.58	59.94	60.29	58.24	-	-
	190	10.35	15.35	15.52	20.35	20.53	26.84	26.32	35.25	35.47	43.99	41.87	54.39	54.60	51.57	65.19	65.40	64.32	-	-
	200	11.34	16.76	17.01	22.18	22.43	29.30	28.86	38.48	38.84	47.96	45.78	59.29	59.63	56.46	71.01	71.35	70.30	-	-
	210	12.33	18.16	18.49	24.00	24.33	31.77	31.38	41.71	42.20	51.93	49.69	64.18	64.66	61.35	76.82	77.30	76.29	87.22	83.82
	220	13.32	19.57	19.98	25.82	26.23	34.23	33.92	44.93	45.57	55.90	53.60	69.07	69.69	66.25	82.64	83.26	82.27	93.87	90.32
	230	14.31	20.98	21.46	27.65	28.13	36.69	36.46	48.16	48.94	59.87	57.51	73.96	74.73	71.14	88.45	89.21	88.25	100.80	97.19
	240	15.30	22.38	22.95	29.47	30.04	39.16	38.99	51.39	52.31	63.84	61.42	78.86	79.76	76.03	94.26	95.17	94.24	107.49	103.75
	250	16.29	23.79	24.43	31.29	31.94	41.62	41.52	54.62	55.67	67.81	65.33	83.75	84.79	80.93	100.08	101.12	100.22	114.19	110.3
V_{Rd} (kN/m)	160	31.60	31.60	47.41	31.60	47.41	50.14	75.21	50.14	75.21	50.14	75.21	50.14	75.21	100.28	50.14	75.21	100.28	-	-
	170-180	34.77	34.77	52.15	34.77	52.15	56.19	84.28	56.19	84.28	56.19	84.28	56.19	84.28	112.38	56.19	84.28	112.38	-	-
	190-200	34.77	34.77	52.15	34.77	52.15	61.81	92.72	61.81	92.72	61.81	92.72	61.81	92.72	123.62	61.81	92.72	123.62	-	-
	210-220	34.77	34.77	52.15	34.77	52.15	61.81	92.72	61.81	92.72	61.81	92.72	61.81	92.72	123.62	61.81	92.72	123.62	84.28	112.37
	230-250	34.77	34.77	52.15	34.77	52.15	61.81	92.72	61.81	92.72	61.81	92.72	61.81	92.72	123.62	61.81	92.72	123.62	92.72	123.62

** ISO 80 MV I Systems (MV+, MV++) feature a continuous welded plate*

Isotec type ISO 80 V

Isotec Type		A	B	C	D	E	F	G	H	I	J	K	L	M
Compression Bars		2Ø12	2Ø12	2Ø12	2Ø12	4Ø12	4Ø12	4Ø12	4Ø12	2Ø12	2Ø12	2Ø12	2Ø12	2Ø12
Shear Bars		4Ø6	6Ø6	8Ø6	10Ø6	6Ø8	8Ø8	6Ø10	8Ø10	3Ø6	4Ø6	3Ø8	4Ø8	3Ø10
Ls (mm)		340	340	340	340	455	455	565	565	340	340	455	455	565
Unit Length (mm)		1000				1000				330				
		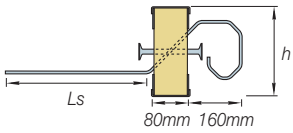				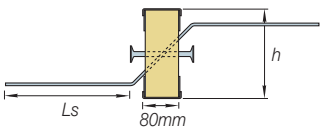				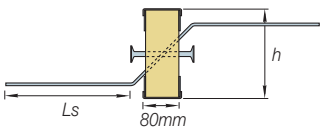				
Design Resistance	Slab Depth h (mm)													
V_{Rd} (kN/m)	160-170	31.60	47.41	63.21	79.01	-	-	-	-	23.70	31.60	-	-	-
	180	34.77	52.15	69.54	86.92	84.28	112.38	-	-	26.07	34.77	42.14	56.19	-
	190	34.77	52.15	69.54	86.92	84.28	112.38	131.69	175.59	26.07	34.77	42.14	56.19	65.84
	200	34.77	52.15	69.54	86.92	92.72	123.62	131.69	175.59	26.07	34.77	46.36	61.81	65.84
	210-250	34.77	52.15	69.54	86.92	92.72	123.62	144.87	193.16	26.07	34.77	46.36	61.81	72.43

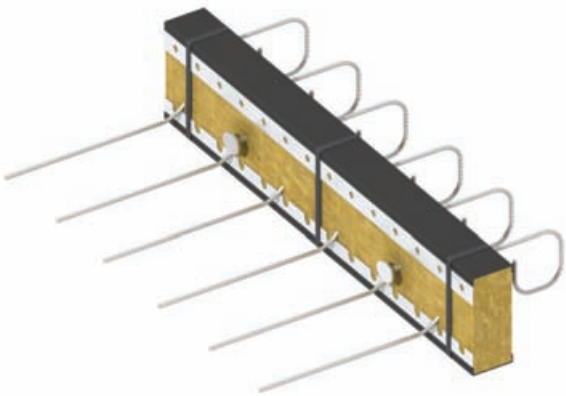

Ancon Isotec ISO 80 V B 200

Notes: *Tables use concrete grade C25/30 and 30mm concrete cover.*
See Design Considerations on page 10.

Isotec type ISO 80 DV

Isotec Type		A	B	C	D	E	F	G	H	I	J	K	L	M
Compression Bars		2Ø12	2Ø12	2Ø12	2Ø12	4Ø12	4Ø12	4Ø12	4Ø12	2Ø12	2Ø12	2Ø12	2Ø12	2Ø12
Shear Bars		2 x 4Ø6	2 x 6Ø6	2 x 8Ø6	2 x 10Ø6	2 x 6Ø8	2 x 8Ø8	2 x 6Ø10	2 x 8Ø10	2 x 3Ø6	2 x 4Ø6	2 x 3Ø8	2 x 4Ø8	2 x 3Ø10
Ls (mm)		340	340	340	340	455	455	565	565	340	340	455	455	565
Unit Length (mm)		1000				1000				330				
		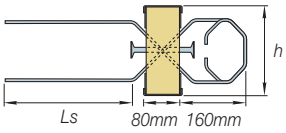				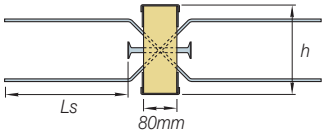				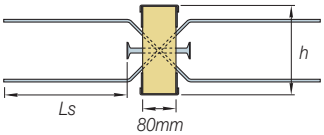				
Design Resistance	**Slab Depth h (mm)**													
V_{Rd} (kN/m)	**160-170**	±31.60	±47.41	±63.21	±79.01	-	-	-	-	±23.70	±31.60	-	-	-
	180	±34.77	±52.15	±69.54	±86.92	±84.28	±112.38	-	-	±26.07	±34.77	±42.14	±56.19	-
	190	±34.77	±52.15	±69.54	±86.92	±84.28	±112.38	±131.69	±175.59	±26.07	±34.77	±42.14	±56.19	±65.84
	200	±34.77	±52.15	±69.54	±86.92	±92.72	±123.62	±131.69	±175.59	±26.07	±34.77	±46.36	±61.81	±65.84
	210-250	±34.77	±52.15	±69.54	±86.92	±92.72	±123.62	±144.87	±193.16	±26.07	±34.77	±46.36	±61.81	±72.43

Isotec type ISO 80 DMV

Isotec Type		A	B	C	D
Tension bars		6Ø12	8Ø12	10Ø12	12Ø12
Compression Bars		6Ø12	8Ø12	10Ø12	12Ø12
Shear Bars		2 x 6Ø6	2 x 6Ø6	2 x 6Ø6	2 x 6Ø8
Ls (mm)		680	680	680	680
Unit Length (mm)		1000			
		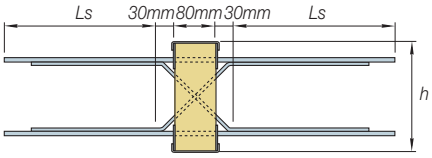			
Design Resistance	**Slab Depth h (mm)**				
M_{Rd} (kNm/m)	**160**	±17.52	±24.85	±32.18	±36.11
	170	±19.76	±27.92	±36.08	±40.57
	180	±22.04	±31.04	±40.03	±45.11
	190	±24.31	±34.13	±43.96	±49.76
	200	±26.57	±37.23	±47.89	±54.35
	210	±28.83	±40.33	±51.82	±58.93
	220	±31.09	±43.42	±55.75	±63.50
	230	±33.36	±46.52	±59.68	±68.08
	240	±35.62	±49.62	±63.60	±72.66
	250	±37.89	±52.71	±67.54	±77.24
V_{Rd} (kN/m)	**160**	±47.41	±47.41	±47.41	±75.21
	170	±47.41	±47.41	±47.41	±84.28
	180	±52.15	±52.15	±52.15	±84.28
	190-250	±52.15	±52.15	±52.15	±92.72

Ancon Isotec Product Referencing

ISO	80	MV+ B	200
Standard Isotec Code	Standard Insulation Thickness	System Type (see tables)	Slab Depth (h)

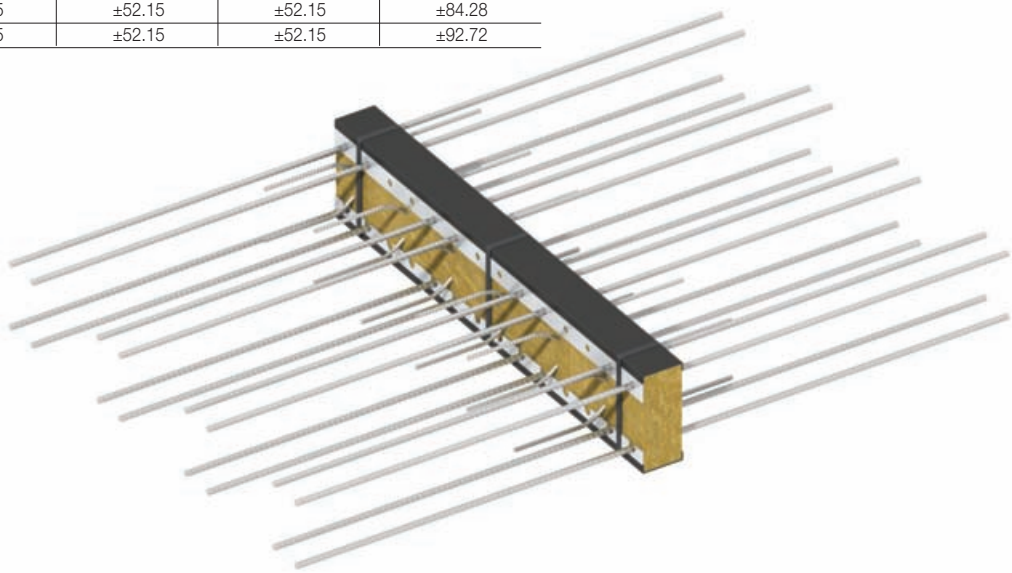

Ancon Isotec ISO 80 DMV B 200

Notes: *Tables use concrete grade C25/30 and 30mm concrete cover.*
See Design Considerations on page 10.

Thermally Insulated Balcony Connectors

Design Considerations

Local Reinforcement

Local reinforcement is required to guarantee that the forces are transferred between the Isotec unit and the concrete. Correct detailing in accordance with appropriate design codes and the recommendations provided here will ensure the Ancon Isotec system attains its full capacity.

Balcony Deflections

Formwork for in-situ balconies and pre-cast balconies must be given appropriate pre-camber so that, once props have been removed after the concrete has reached appropriate strength, the balcony is inclined in the correct direction and to the correct slope.

Ancon can advise on calculated deflections upon receipt of relevant design data.

Local Reinforcement - Main reinforcement omitted for clarity

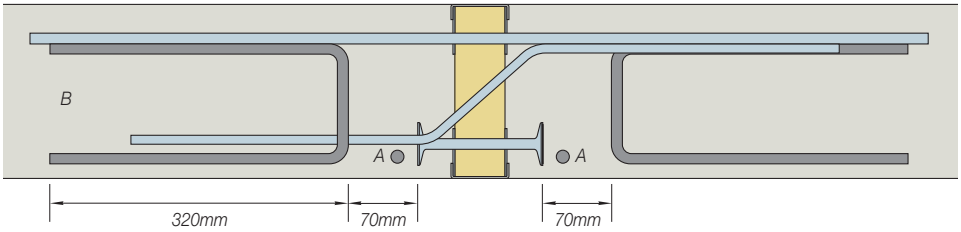

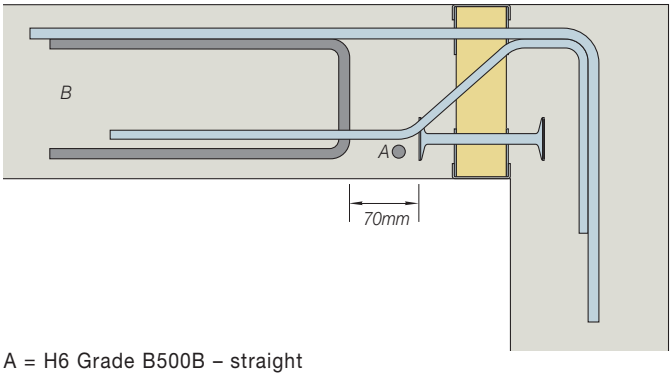

A = H6 Grade B500B – straight

B = H8 Grade B500B, minimum length 320mm, U-bar (one for each compression stud)

- Overlapping bars must be determined by the project engineer
- Under no circumstances should Isotec elements be modified after manufacture. Bars should neither be bent nor cut without prior authorisation from Ancon.

Corner Details

To avoid a reinforcement clash at corners, 20mm thick mineral wool make-up strips are typically detailed on the Isotec units installed locally at the corner. The corner units should be specified shorter in height than those used elsewhere in the slab. The filler pieces are supplied glued to the top and bottom respectively of the adjacent Isotec corner units.

Alternatively, if sufficient time is provided, special full height Isotec corner units can be manufactured that feature offset tension and shear bars to avoid clashes with adjacent units, eliminating the need for infill pieces.

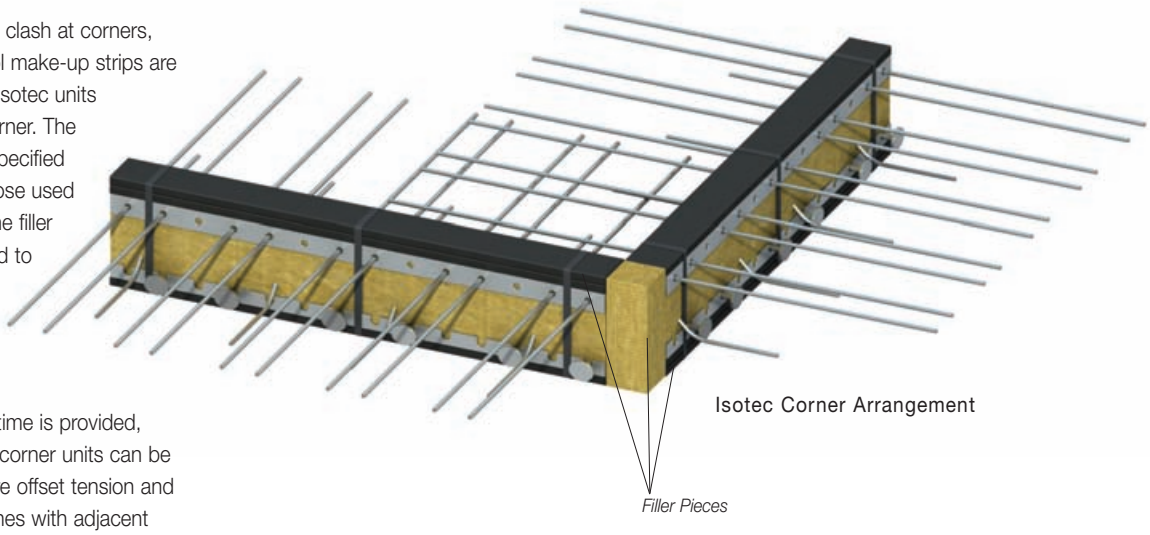

Isotec Corner Arrangement

Movement Joints

The maximum allowable uninterrupted length of balcony to be supported by Isotec units, before a movement joint is required, is given in the table in metres. At corners, the distance is half the lengths given.

Bar Diameter (mm)	≤10	12	14	16	20
Joint Centres, L (m)	13.00	11.30	10.10	9.20	8.00

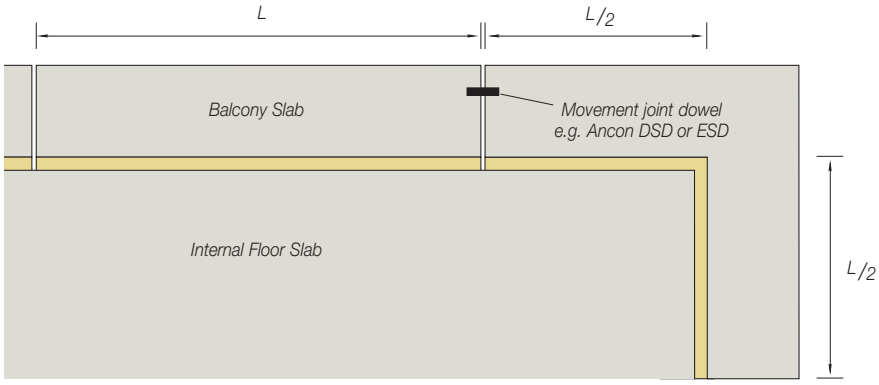

Movement Joint Centres

Installation Guidance

Prior to installation, ensure all Isotec elements have not been damaged during transit or site handling and that they correspond to the project specification.

Scan the code to watch an installation video.

Step 1

Place the Isotec system on the formwork in line with the project drawings, ensuring all Isotec elements are positioned and orientated as indicated on the product label.

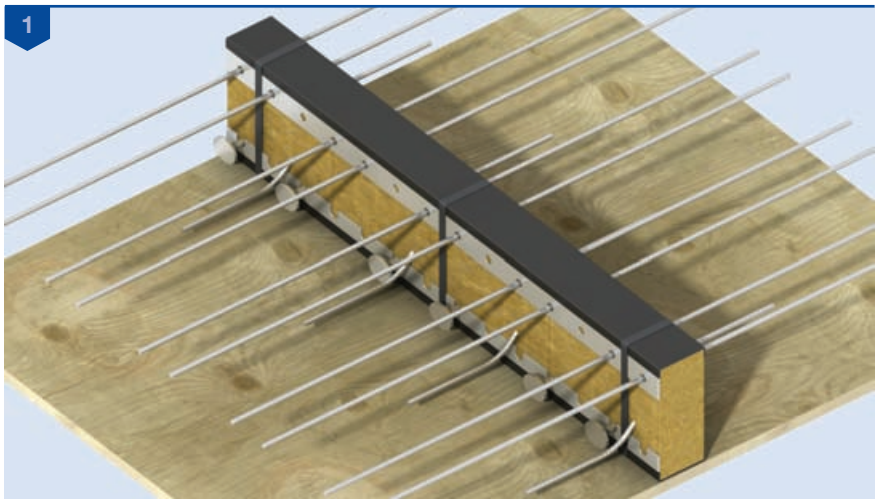

Step 2

Position all necessary local and main reinforcement. Secure each Isotec unit to the slab reinforcement. Any gaps between Isotec elements must be filled with equivalent insulating material.

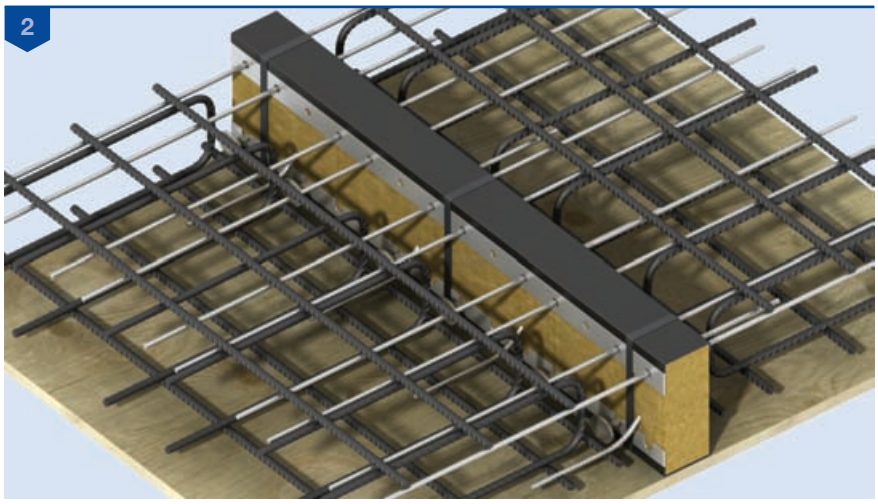

Step 3

Concrete should be poured adjacent to the Isotec system and simultaneously to either side to avoid any displacement.

Precast applications

If Isotec elements are used in precast balconies, lifting systems must be positioned within the gaps between Isotec elements. Ensure the compression studs do not apply pressure on an internal structure already in position.

Thermally Insulated Balcony Connectors

Ancon Isolan

System Benefits

- ✓ Cost-effective concrete-to-concrete connector
- ✓ Uses conventional rebars to provide tension and compression
- ✓ Accommodates all structural loads
- ✓ Modular design allows for special configurations
- ✓ Available in depths to suit most common slab thicknesses
- ✓ Fire protection available

Standard Isolan systems, comprising rigid CFC-free polystyrene insulation and stainless steel shear reinforcement, suit most depths of cantilever and simply supported balconies. The various systems allow the transfer of all loads in structural concrete i.e. moment, shear, compression and tension, and are suitable for straight runs and both internal and external corners.

Ancon Isolan connectors use conventional reinforcing bars to provide the tension and compression reinforcement. When compared to systems where this reinforcement is an integral component, the Ancon Isolan solution can provide substantial cost savings and simplify specification, scheduling, transportation, handling and installation.

ψ-Value

The Isolan system has a typical ψ-value of 0.5W/mK depending on the overall construction.

Curved or Stepped Balconies

Special configurations can be manufactured to suit specific project requirements including curved or stepped balconies.

Isolan Systems

Standard Isolan systems are available in five heights to suit different depths of balcony i.e. 160, 180, 200, 220 and 240mm, and are supplied complete with stainless steel shear reinforcement. Tension and compression reinforcement can form part of the slab reinforcement package or can be supplied by Ancon on request.

Isolan MV System

Isolan V System

MV System

The Ancon Isolan MV system is used for the transfer of moment and shear forces in cantilevered balconies.

V System

The Ancon Isolan V system is used for the transfer of shear forces in simply supported balconies.

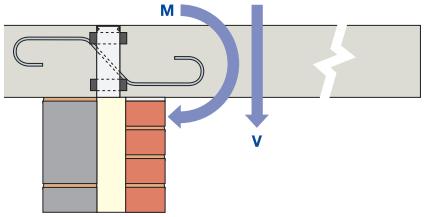

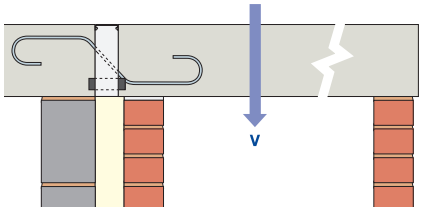

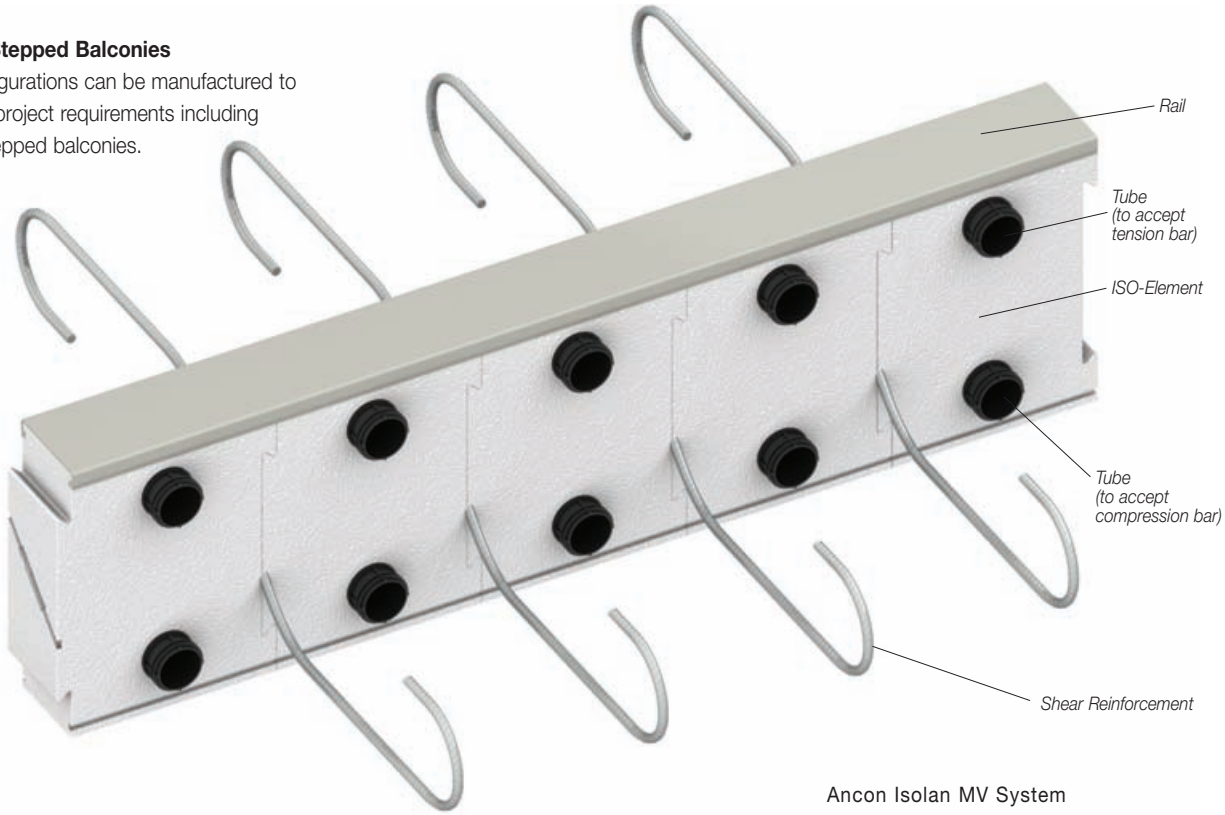

Ancon Isolan MV System

System Components

ISO-Element

The ISO-Element is 60mm thick, CFC-free, rigid white polystyrene insulation in a standard length of 750mm. It is available in five heights (160, 180, 200, 220 and 240mm) to suit different depths of balcony.

Shear Reinforcement

The shear reinforcement is duplex stainless steel grade 1.4362 and is available in three diameters (6, 8 and 10mm) as standard. In addition to the standard systems, this reinforcement can be bent into other required shapes outside the polystyrene insulation element.

Tubes

Polypropylene tubes with a 27mm internal diameter are located at pre-determined positions in the ISO-Element to allow for the passage of tension and compression reinforcing bars.

Rail

A high density polyethylene rail is located on the top edge of the ISO-Element to protect the insulation.

Tension/Compression Reinforcement (Not Supplied as Standard)

Reinforcement used for tension and compression bars to be grade B500B to BS4449: 2005. These can be sourced independently or supplied by Ancon.

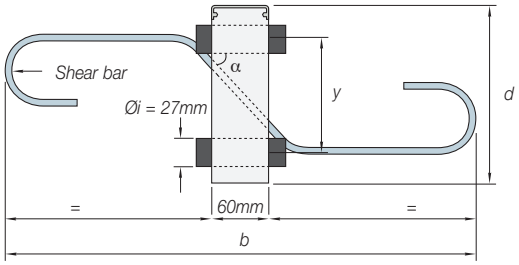

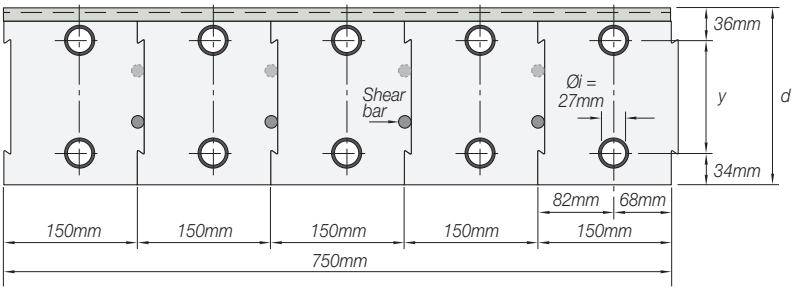

Height d (mm)	Height y (mm)	Length b Shear Bar 6mm Dia.	Length b Shear Bar 8mm Dia.	Length b Shear Bar 10mm Dia.	Angle α
160	90	530	670	810	39°
180	110	530	670	810	44°
200	130	530	670	810	47°
220	150	530	670	810	53°
240	170	530	670	810	57°

Note: *Shear bar length (b) tolerance +/-10mm*

Corrosion Resistance

The Ancon Isolan system has been engineered to provide a high resistance to corrosion. The shear reinforcement is stainless steel and the carbon steel tension and compression reinforcement passing through the insulation unit is encased in polypropylene tubes which fill with concrete fines at the time of casting. This prevents water and oxygen from reaching the bars, thus providing corrosion protection.

Fire Protection (Optional Extra)

The Isolan system has been assessed in accordance with DIN 4102: Fire behaviour of building materials and components. Fire protection can be provided by adding Duripanel fire resistant strips to the base or to the top and base of the ISO-Element. The strips are available in 18, 28 or 36mm thickness providing 30, 60 or 90 minute fire resistance respectively. Examples of how these strips are referenced are 1R30 for a 30 minute strip fixed to the base and 2R90 for a 90 minute strip fixed to the top and base. When specifying and ordering, these references should be added as a suffix to the Isolan system (see page 15), for example 4MV6-200-5Ø12T/ 5Ø16C-1R60. The polyethylene rail is omitted from the ISO Element if these strips are employed to the top. For further information contact Ancon's Technical Services Team.

As an alternative to Duripanel, Ancon recommends PROMASEAL® Expansion Joint Strips from Promat UK. These strips are highly compressible and flexible seals which offer 120 minute fire resistance. Full technical and installation details are available from the manufacturer. Strip size 4009042 suits the 60mm insulation thickness of an Isolan system and should be sourced directly from Promat UK.

Thermally Insulated Balcony Connectors

Isolan MV Range

2MV6

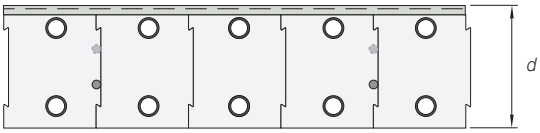

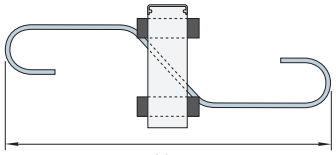

2 Shear Bars 6mm Diameter - Supplied
5 Tension and 5 Compression Bars Required

4MV6

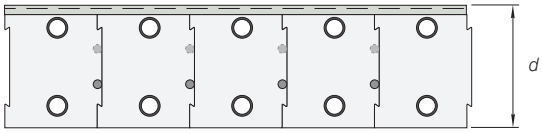

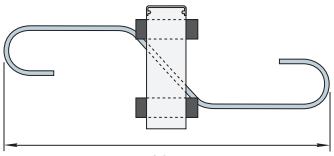

4 Shear Bars 6mm Diameter - Supplied
5 Tension and 5 Compression Bars Required

4MV8

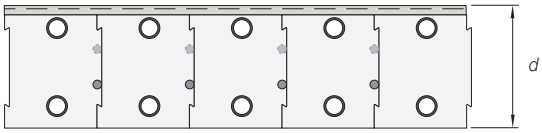

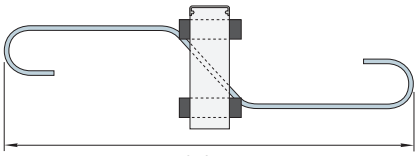

4 Shear Bars 8mm Diameter - Supplied
5 Tension and 5 Compression Bars Required

4MV10

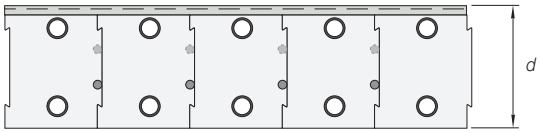

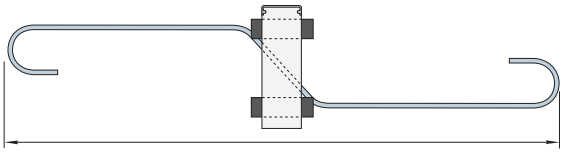

4 Shear Bars 10mm Diameter - Supplied
5 Tension and 5 Compression Bars Required

Isolan V Range

2V6

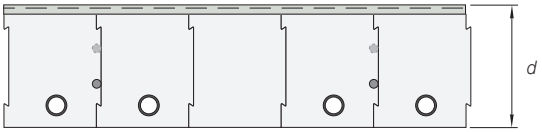

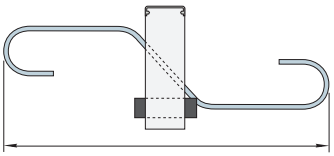

2 Shear Bars 6mm Diameter - Supplied
4 Compression Bars Required

4V6

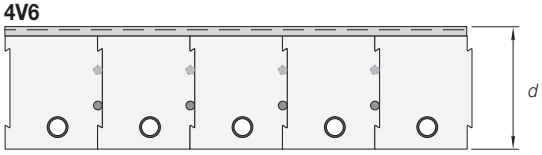

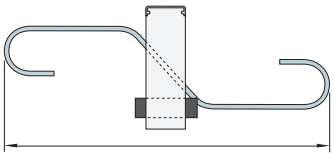

4 Shear Bars 6mm Diameter - Supplied
5 Compression Bars Required

4V8

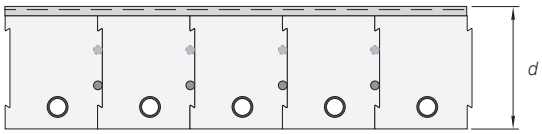

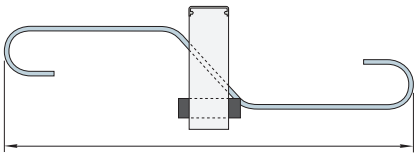

4 Shear Bars 8mm Diameter - Supplied
5 Compression Bars Required

4V10

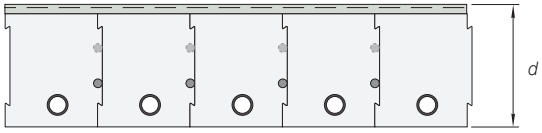

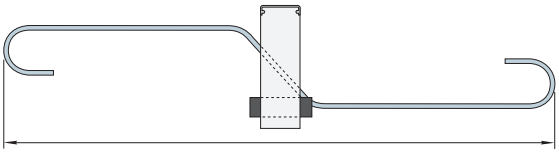

4 Shear Bars 10mm Diameter - Supplied
5 Compression Bars Required

Specification Guidance

Design Information

The graphs on pages 17 to 19 are used to select the most appropriate Isolan element, and the diameters of the shear, tension and compression reinforcement.

Example calculations are provided on the following page. Consideration should be given to horizontal forces on parapets and local concentrated load checks, these are not included in the examples.

The graphs provide the design resistance (ultimate limit state) values for the shear V_{Rd} and moment M_{Rd}.

The Isolan element design is based on normal structural calculations. The calculations are based on the following material properties.

Concrete: C25/30 (cylinder/cube compressive strengths) = 30N/mm^2

Reinforcement: Shear reinforcement material, duplex stainless bar designation 1.4362 BS6744, Grade 500
R_e or $R_{p0.2} \geq 500$N/mm^2
$R_m \geq 550$N/mm^2

Tension and compression reinforcement, BS4449, Grade B500B
$R_e \geq 500$N/mm^2
$R_m \geq 540$N/mm^2

The partial load factors used in the examples are:
Dead load (persistent) = 1.35
Imposed load (quasi) = 1.50

How to Use The Graphs

MV Elements

1. The graph for the height of the Isolan element that corresponds to balcony slab thickness is selected.
2. The design shear load required (unit: kN per linear metre) is plotted on the horizontal axis of the graph and a vertical line drawn. From this, the relevant Isolan element type (i.e. 2MV6, 4MV6, 4MV8 or 4MV10) is selected.
3. The required design bending moment (unit: kNm per linear metre) is plotted on the vertical axis of the graph and a horizontal line drawn.
4. The intersection between the vertical line corresponding to the design shear load and the horizontal line corresponding to the design moment determines the respective diameters of the tension and compression reinforcement e.g. Ø12T/Ø16C. The first number refers to tension and the second to compression reinforcement. Refer to the drawings on page 14 for the number of bars required.

V Elements

1. The balcony slab thickness is selected on the horizontal axis of the graph and a vertical line drawn.
2. The design shear load required (unit: kN per linear metre) is plotted on the vertical axis of the graph and a horizontal line drawn.
3. The intersection between the vertical line corresponding to the balcony slab thickness and the horizontal line corresponding to the design shear load determines the Isolan element type and diameter/number of compression bars.

Calculation Method

A hard copy of the calculation to derive the design resistance graphs is available from Ancon on request.

Balcony Deflection

The deflection of the equivalent 'monolithic' balcony should be calculated in the usual way, in compliance with relevant standards and design codes. A coefficient of 1.20 must be applied to the calculated figure to determine the maximum deflection with Isolan connectors. The final figure can be used to determine the amount of pre-camber to apply to the formwork to compensate for the deflection.

Ancon Isolan Product Referencing

4MV8 - 200 - 5Ø12T / 5Ø16C

Number of shear bars, System type, Diameter of shear bars | *System height* | *Number and diameter of tension bars required* | *Number and diameter of compression bars required*

Typical Specification Clause

Once the appropriate Isolan system has been selected from the design graphs, the following clause may be adapted for use. Details in *italics* must be changed to suit the product reference.

4MV8 - 200 - 5Ø12T / 5Ø16C
Ancon Isolan *MV* system *200mm* high comprising CFC-free polystyrene insulation, 60mm thick by 750mm long, and *four* stainless steel grade 1.4362 shear reinforcing bars of *8mm* diameter. System requires *five 12mm* diameter grade B500B tension bars and *five 16mm* diameter grade B500B compression bars to be supplied by others or by Ancon.

Applications

Ancon Isolan is suitable for straight runs and both internal and external corners. The following drawings show example applications in plan view.

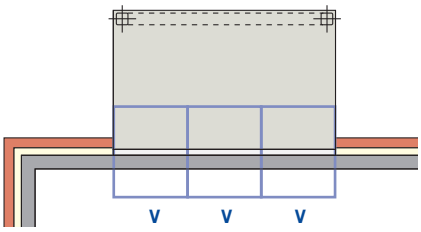

Simply Supported Balcony

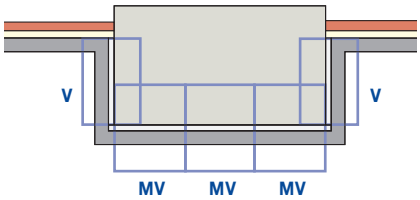

Supported Slab Recessed Balcony

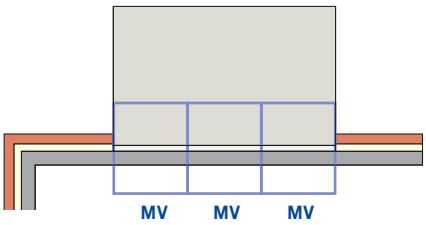

Cantilever Balcony

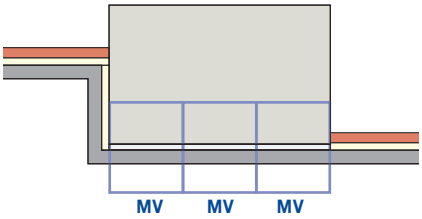

Cantilever Balcony at Internal Corner

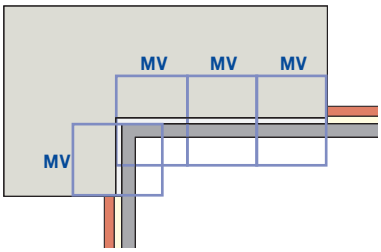

Cantilever Balcony with 90° External Corner

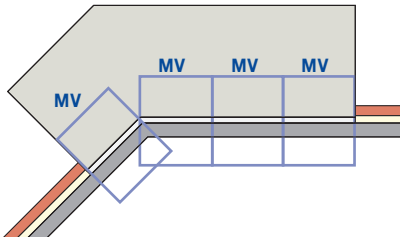

Obtuse Angle Corner Cantilever Balcony

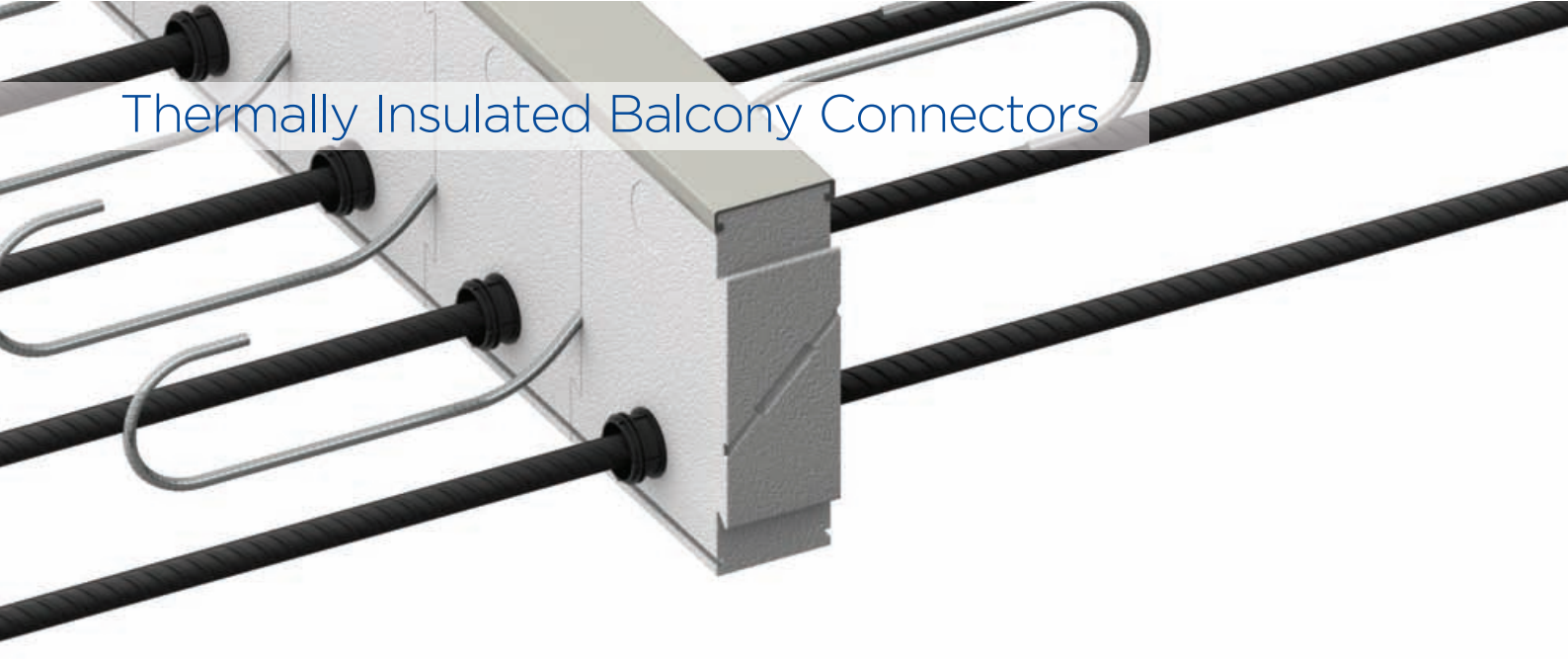

Thermally Insulated Balcony Connectors

Design Examples

1. MV Element Depth 180mm

Dead load slab G_{ks}	= 4.5kN/m²
Imposed load Q_k	= 3.0kN/m²
Parapet load G_{kp}	= 5.0kN/m
E_d = (1.35 x 4.5 + 1.50 x 3.0)	= 10.6kN/m²
G_d = (1.35 x G_{kp}) = (1.35 x 5.0)	= 6.8kN/m
M_{Ed} = (E_d x l_1^2)/2 + (G_d x l_2)	= **34.1kNm/m**
V_{Ed} = (E_d x l_1) + G_d	= **28.0kN/m**

From graph for MV180 select 4Ø6 shear bars, Ø12/16 (tension/compression bars). Product reference 4MV6-180-5Ø12T/5Ø16C.

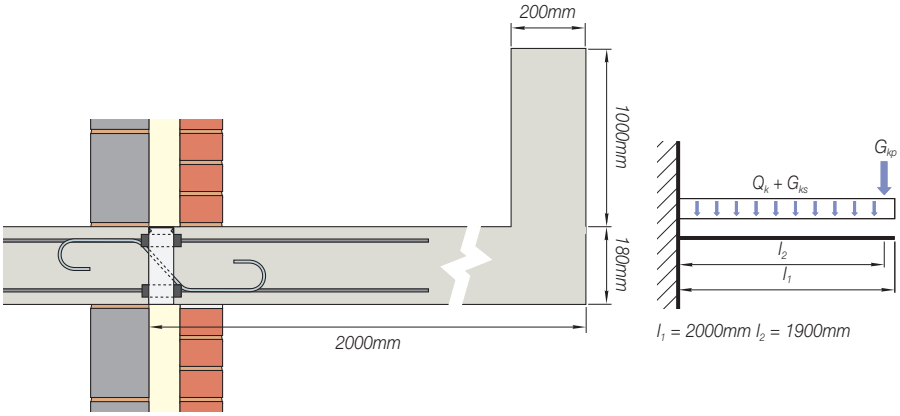

MV System

2. MV Element Depth 220mm

Dead load slab G_{ks}	= 5.5kN/m²
Dead load (point) G_{kp}	= 35kN
Imposed load Q_k	= 3.0kN/m²
E_d = (1.35 x 5.5 + 1.50 x 3.0)	= 11.9kN/m²
G_d = (1.35 x G_{kp}) = (1.35 x 35)	= 47.3kN/m
M_{Ed} = (E_d x l_1^2)/2 + (G_d x l_2)	= **57.1kNm/m**
V_{Ed} = (E_d x l_1) + G_d	= **68.7kN/m**

From graph for MV220 select 4Ø8 shear bars, Ø16/20 (tension/compression bars). Product reference 4MV8-220-5Ø16T/5Ø20C.

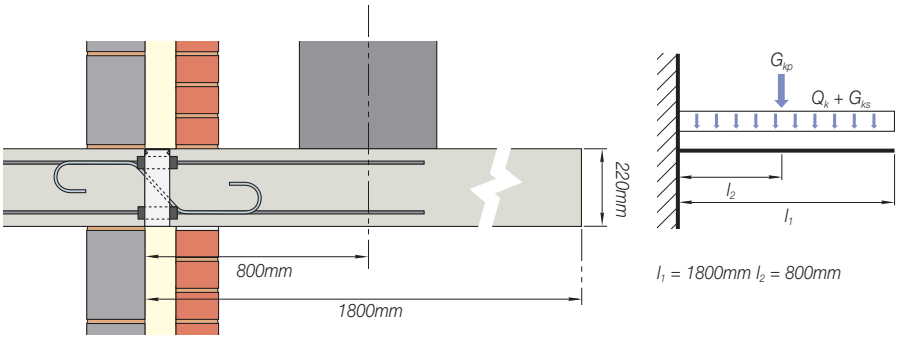

MV System

3. V Element Depth 200mm

Dead load slab G_{ks}	= 5.0kN/m²
Dead load finishes G_{kf}	= 2.0kN/m²
Imposed load Q_k	= 5.0kN/m²
E_d = (1.35 x 7.0 + 1.50 x 5.0)	= 17.0kN/m²
V_{Ed} = (E_d x l_1)/2	= **51.0kN/m**

From V graph select 200mm 4V8/5Ø12C, (4Ø8 shear bars with 5Nr. Ø12 compression bars). Product reference 4V8-200-5Ø12C.

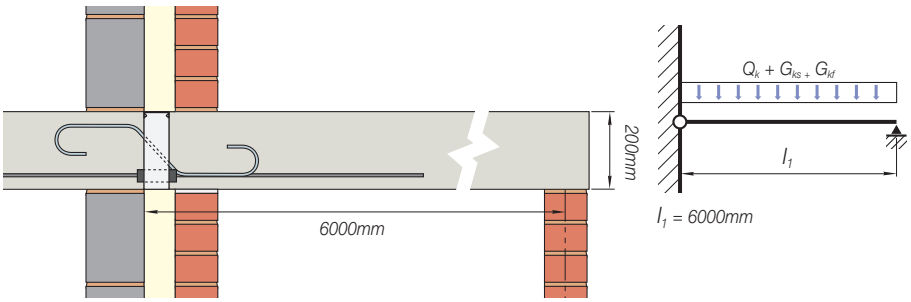

V System

Design Resistances

Isolan MV Element - 160mm Height

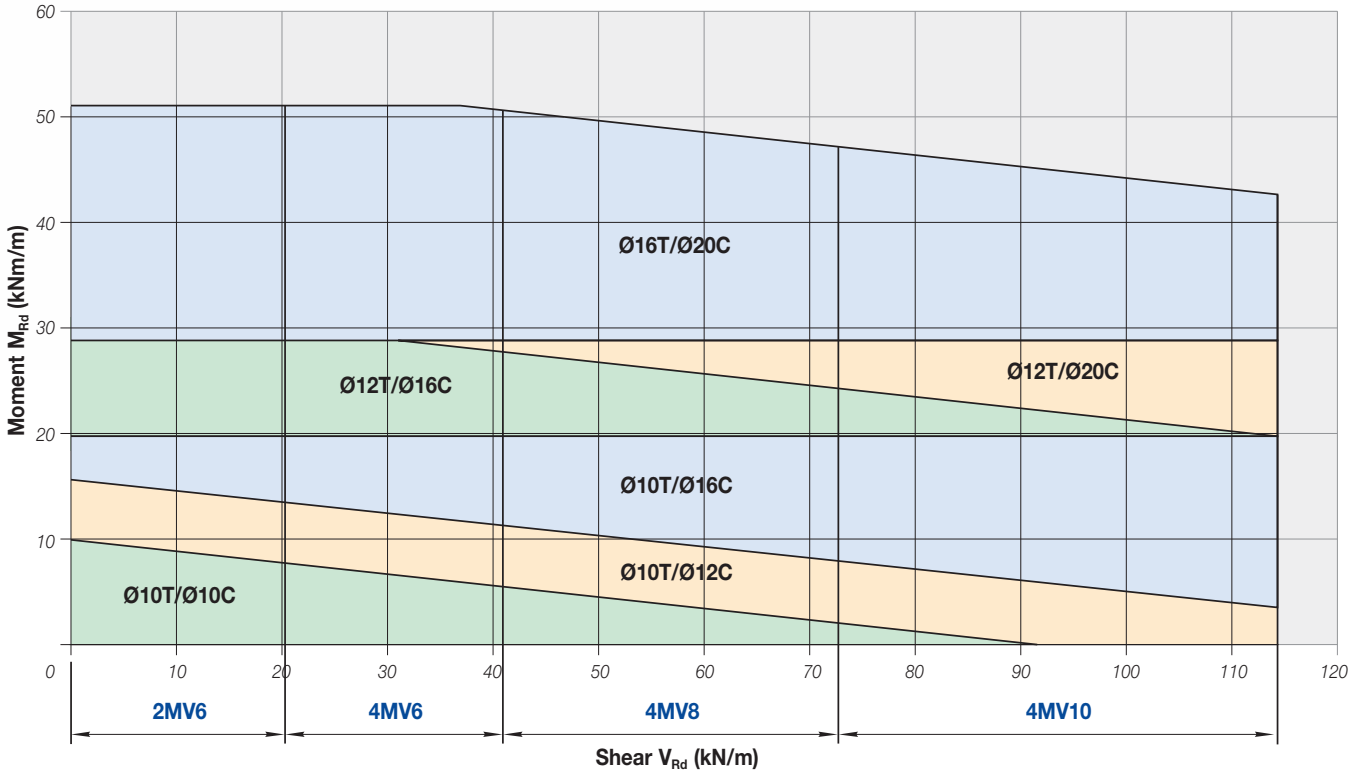

Isolan MV Element - 180mm Height

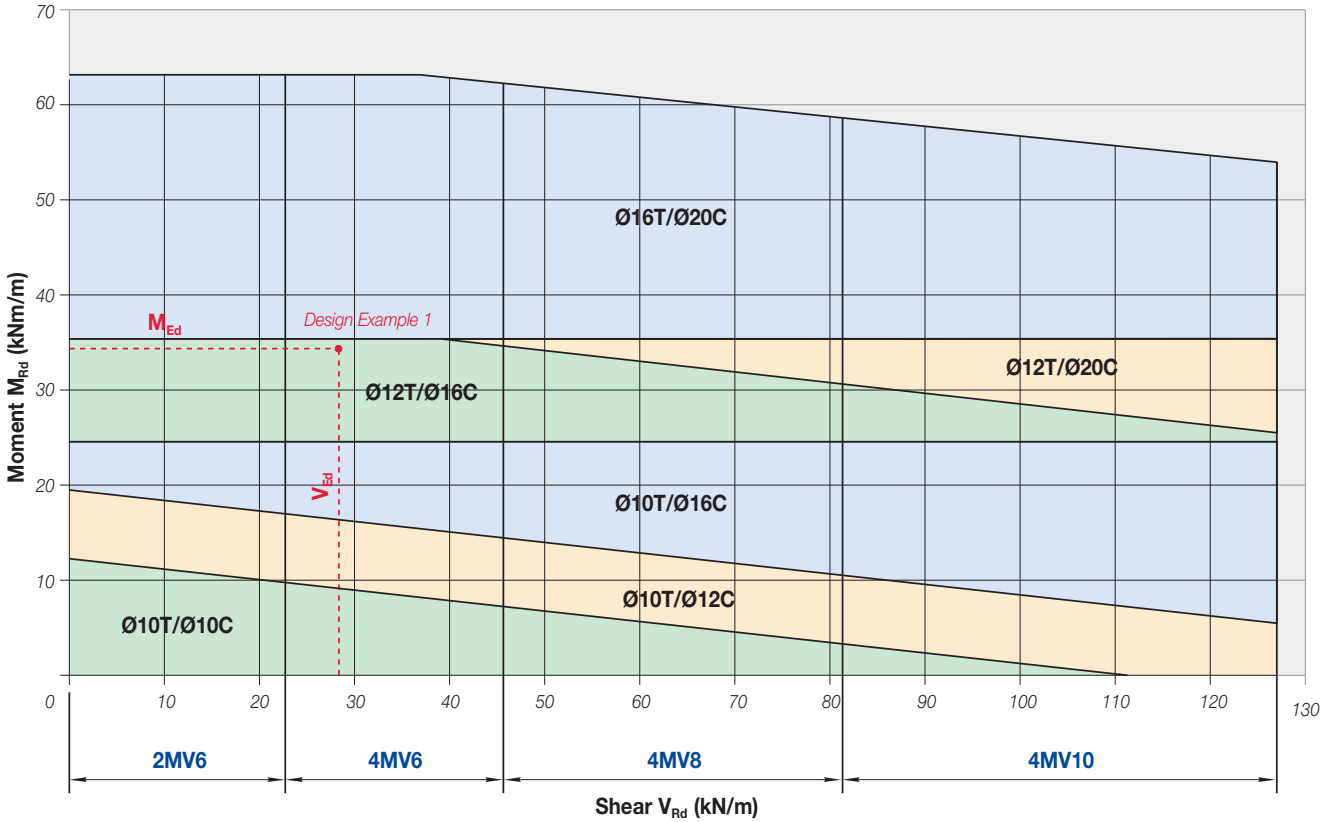

Thermally Insulated Balcony Connectors

Isolan MV Element - 200mm Height

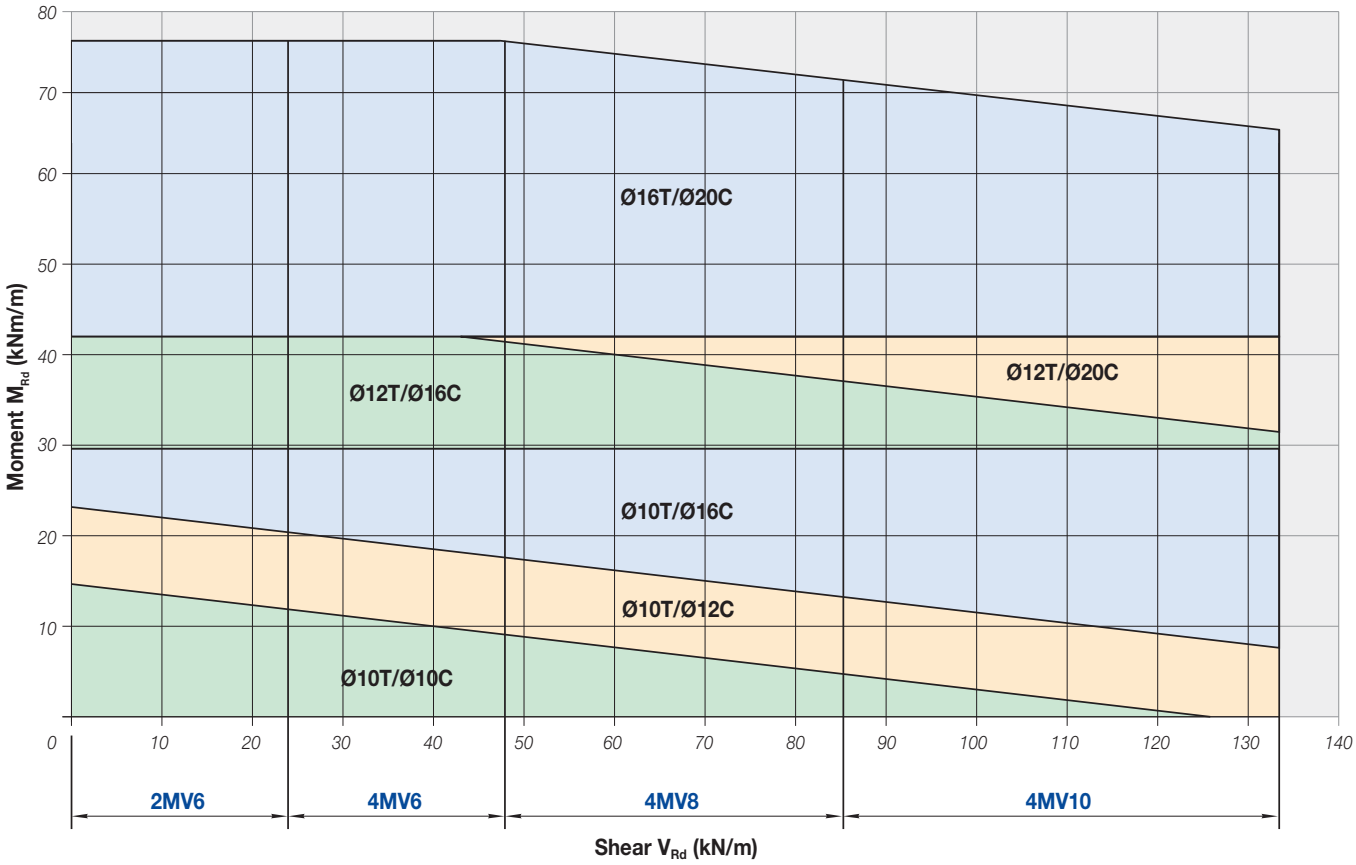

Isolan MV Element - 220mm Height

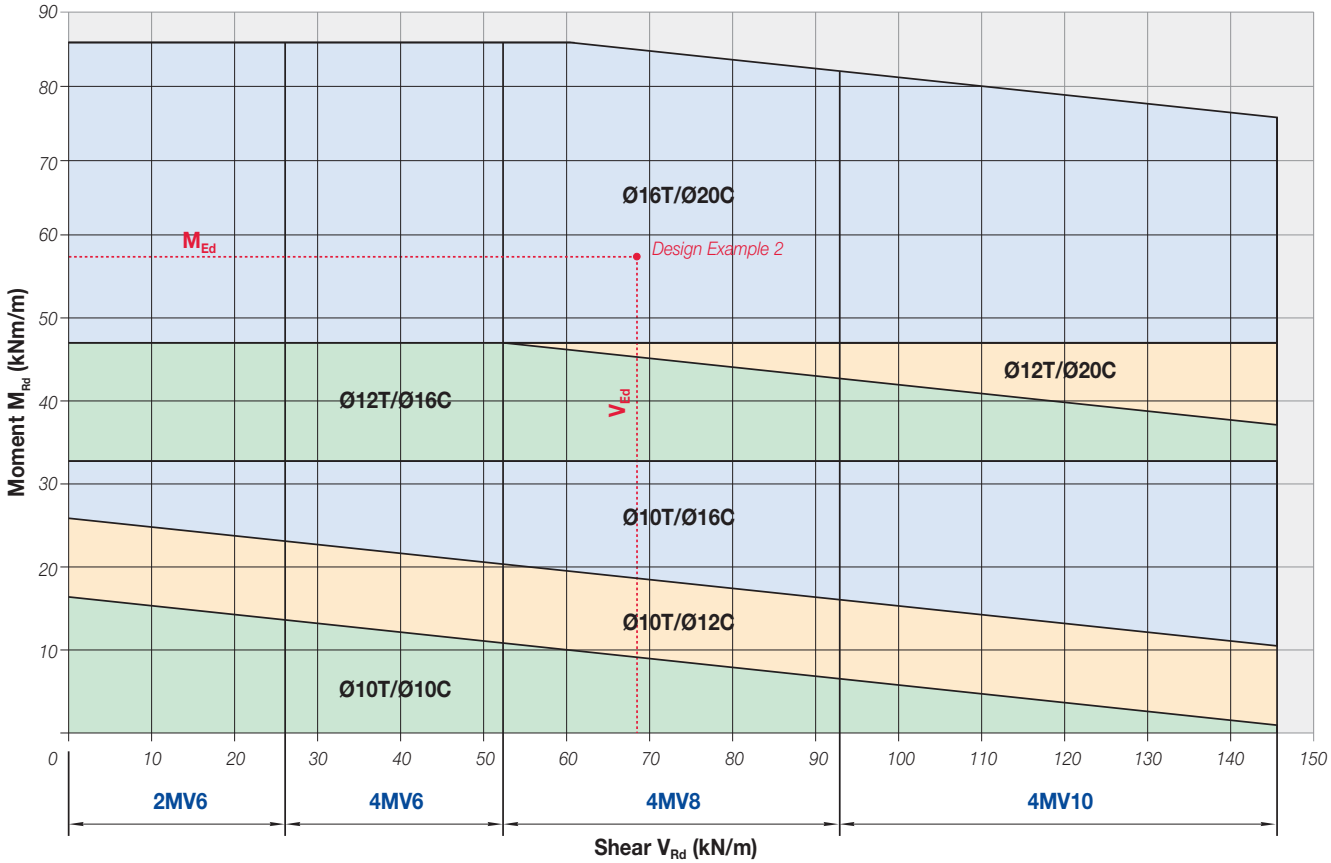

Isolan MV Element - 240mm Height

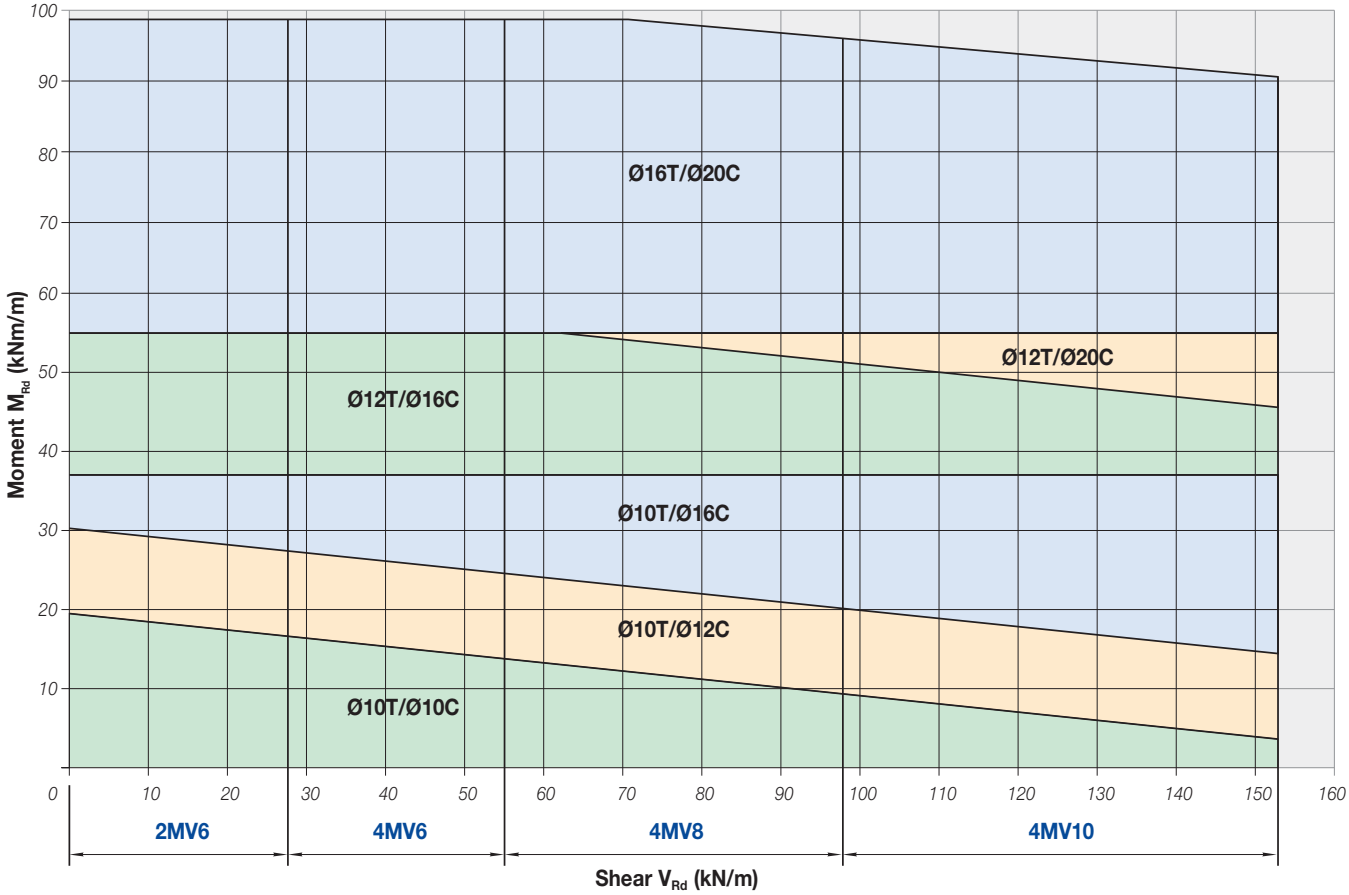

Isolan V Element - Sizes 160, 180, 200, 220 and 240mm

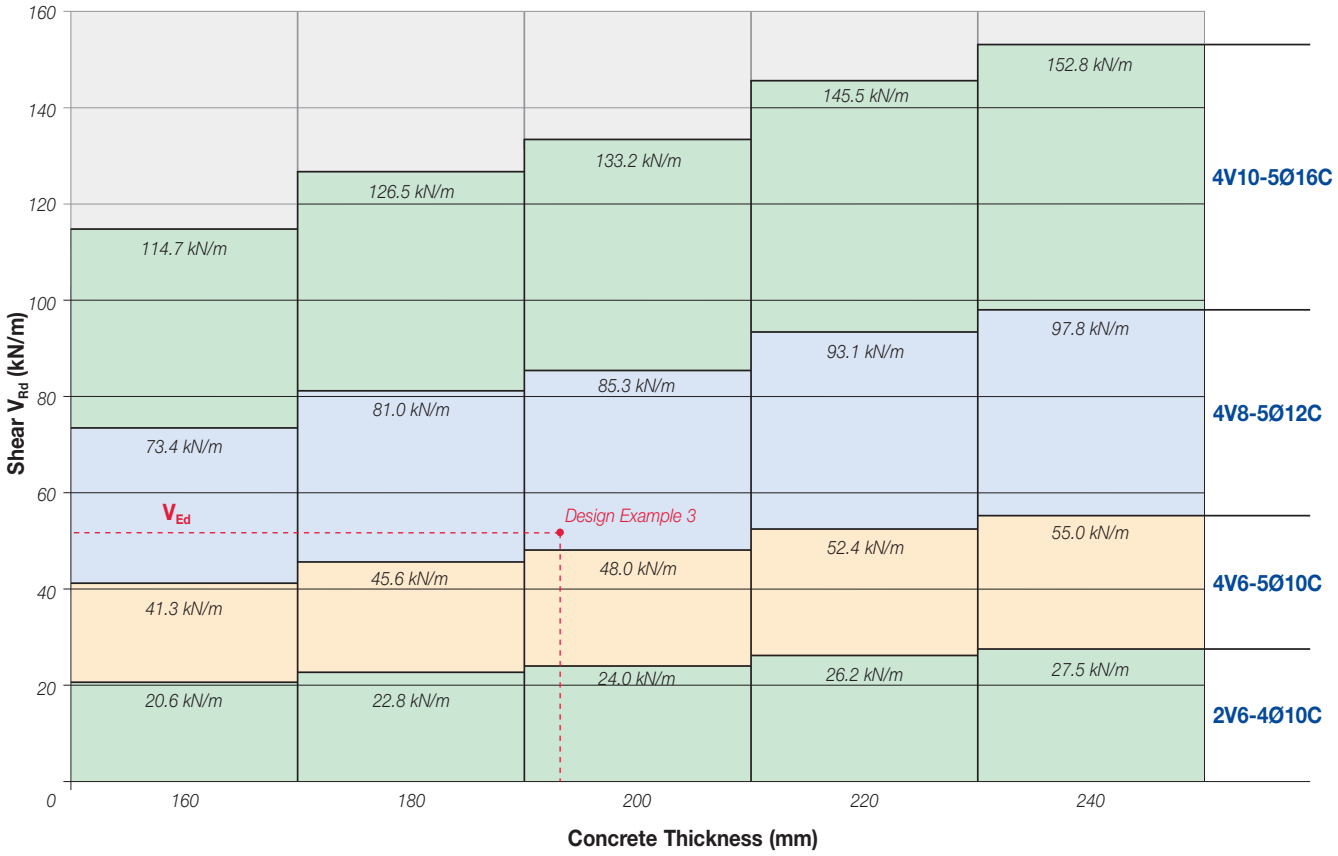

Thermally Insulated Balcony Connectors

Design Considerations

Corner Details

Where the diameter of either the tensile or compression reinforcement is above 12mm, special consideration should be given at corners to avoid a reinforcement clash.

20mm thick polystyrene make-up strips are typically detailed on the Isolan units to be installed locally at the corner. The corner units should be specified shorter in height than those used elsewhere in the slab. The filler pieces are supplied glued to the top and bottom respectively of the adjacent corner units. This is a simple and cost-effective way of ensuring the bars fall in a different horizontal plane.

When using 10mm or 12mm diameter bars, the 27mm diameter polypropylene tube can be used to offset bar height. Bars are simply positioned either to the top or to the bottom of the tubes and this position is then alternated by the bars in the adjacent unit to avoid a clash.

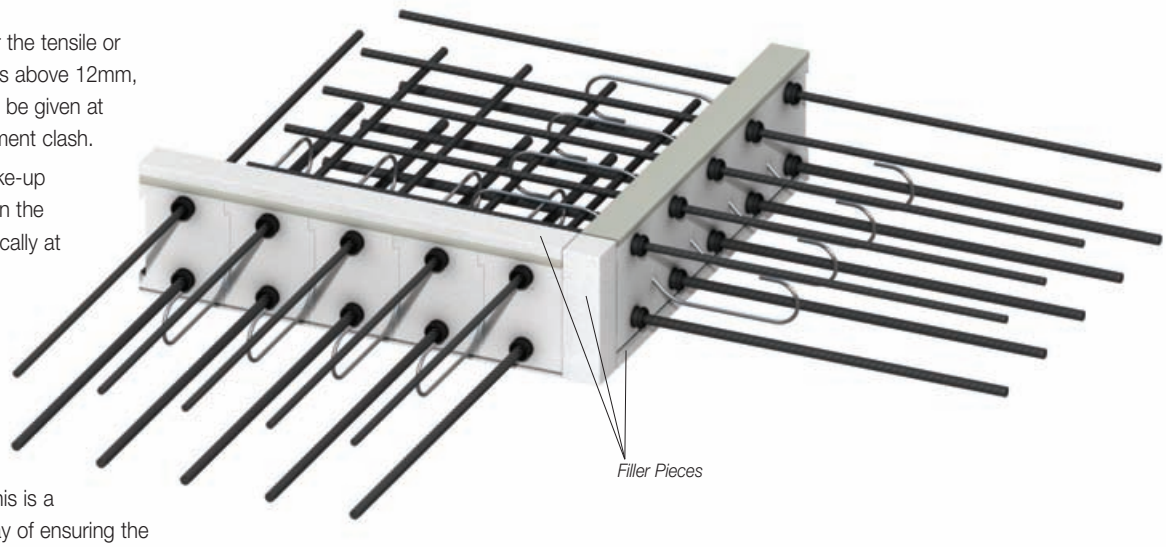

Isolan Corner Arrangement

Reinforcement Anchorage Lengths

The information noted in the table provides the minimum anchorage lengths for Grade B500B tension and compression reinforcement to BS EN 1992, Eurocode 2.

The Grade B500B anchorage reinforcement should be detailed with the general balcony reinforcement. It can be sourced independently or supplied by Ancon on request.

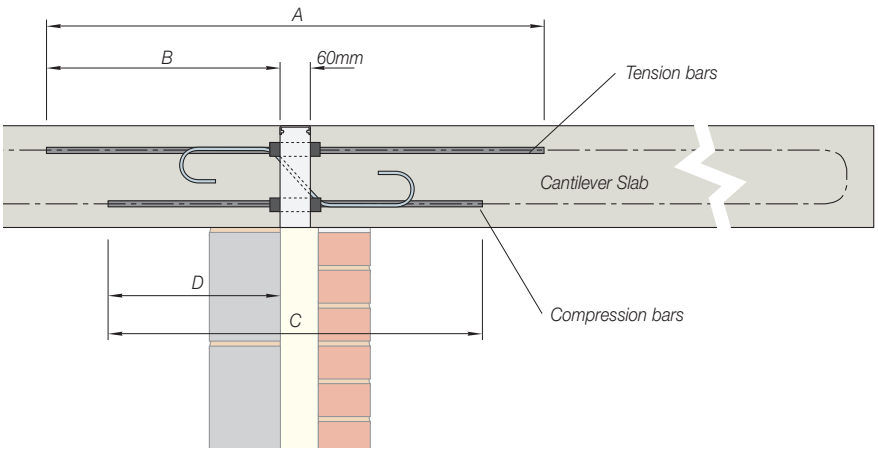

Reinforcement Anchorage Lengths

Rebar Size (mm)	Tension Bar Dimension 'A' (mm)	Tension Bar Dimension 'B' (mm)	Compression Bars Dimension 'C' (mm)	Compression Bars Dimension 'D' (mm)
10	1040	490	920	430
12	1320	630	1080	510
16	1880	910	1400	670
20	2440	1190	1720	830

Note: *Tension bar lengths shown are based on lap lengths whilst compression bar lengths shown are based on anchorage lengths*

Movement Joints

The maximum allowable uninterrupted length of balcony to be supported by Isolan units, before a movement joint is required, is given in the table in metres. At corners, the distance is half the lengths given.

Bar Diameter (mm)	≤10	12	14	16	20
Joint Centres, L (m)	13.00	11.30	10.10	9.20	8.00

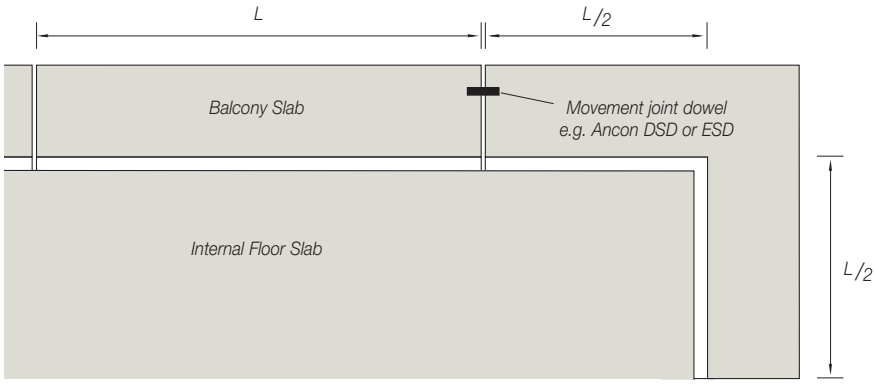

Movement Joint Centres

Installation

Ancon Isolan components are fast and simple to install. These steps are provided as guidance and should be followed in conjunction with the site engineer's instructions and structural engineer's reinforcement details.

Any polystyrene which is damaged must be replaced or alternatively, where possible, patched with polyurethane foam to maintain the insulation properties.

Step 1

The Isolan system should always be orientated so the stainless steel shear reinforcing bars are at the bottom of the slab on the side of the load (the balcony side). The unit is then positioned and secured to the formwork.

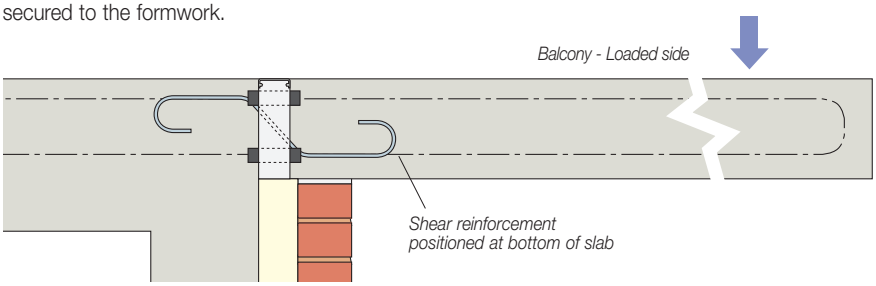

Note: *For clarity, not all reinforcement is shown.*

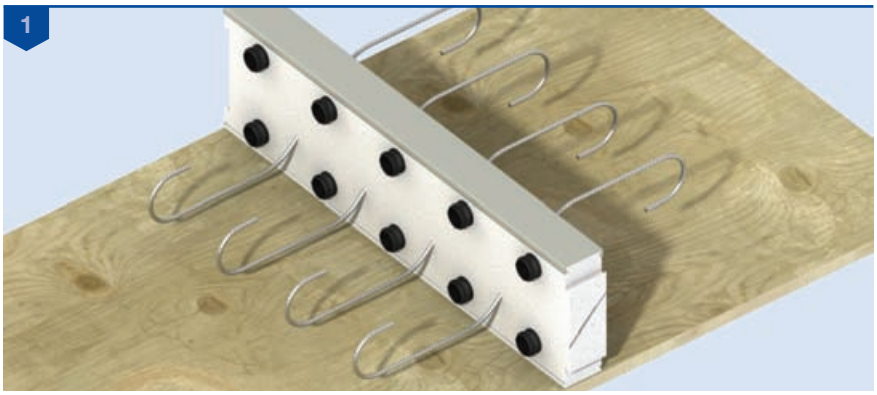

Step 2

Insert the compression bars and tension bars (not supplied as standard with the system) through the polypropylene tubes, and secure them to the main floor slab and balcony reinforcement. The minimum anchor length must be achieved either side of the Isolan system, see page 20 for detailed dimensions.

Care should be taken to ensure that any misalignment of the compression bars does not exceed 25mm in 1000mm (1 in 40) as illustrated in the Part Plan View diagram.

Step 3

The concrete should preferably be poured adjacent to the Isolan system and simultaneously to either side to avoid any displacement of the polystyrene units. If the concrete is poured on one side only, the second side being at a later date, then the Isolan units must be securely fixed to avoid displacement.

Installation is shown for the MV system but is the same for the V system where the tension bars are excluded.

Misalignment of Compression Bars

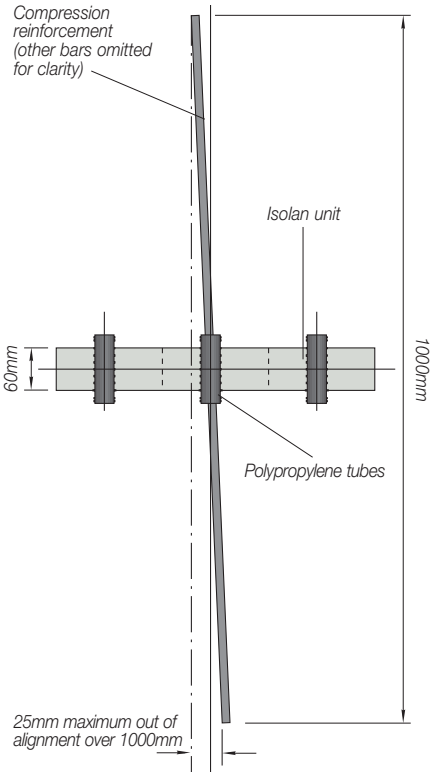

Part Plan View

Thermally Insulated Balcony Connectors

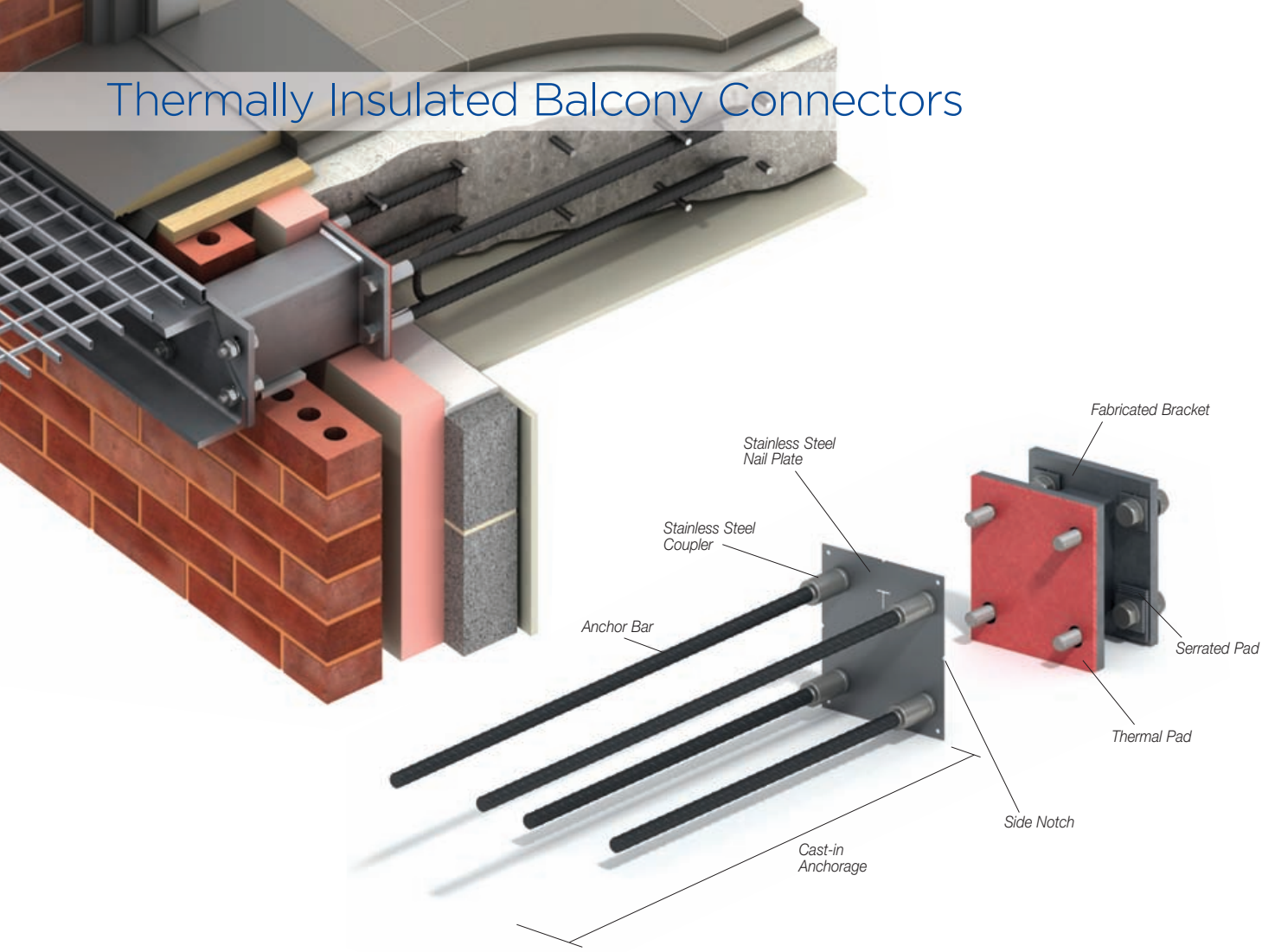

Ancon STC

The STC system is used for anchoring steel balconies to concrete floor slabs and has been proven through thermal modelling to reduce heat loss when compared to direct connections.

The two part assembly, comprising a cast-in anchorage and a post-fixed bracket with thermal pad located at the interface, allows for phased construction. Unlike one-piece systems which are left exposed on-site, the STC bracket component is not fixed until required reducing the risk of damage.

Manufactured to order, the bracket depth can be designed to suit the exact requirements of the application and avoid conflicts with the external cladding.

Serrated pads and slots provide adjustability in the final bracket position without the need for stop butts or levelling shims.

Anchor bars are Grade B500B and are supplied fixed to Duplex stainless steel couplers. A stainless steel nail plate completes the assembly and features side notches indicating the centreline, normally located on the centreline of the slab, to ease accurate installation.

The fabricated brackets are manufactured from hot-dip galvanised S355 plain carbon steel as standard and can be supplied in stainless steel (SSTC) for applications requiring enhanced corrosion protection such as coastal areas. They are designed to EN 1993 (Eurocode 3) and CE-marked to EN 1090 Part 1.

Thermal modelling of a typical insulated render wall application using Ancon STC connectors confirmed that the temperature factor was within the limits detailed in BRE document IP1/06 for eliminating condensation risk in dwellings, residential buildings, schools, offices and retail premises (0.75).

System Benefits

- ✓ Proven through thermal modelling to reduce heat loss
- ✓ Two-part assembly allows phased installation and avoids damage by other trades
- ✓ Simple nailplate design avoids cutting of formwork around the connector
- ✓ Variable bracket projection to suit wall construction and avoid conflict with cladding
- ✓ Serrated slots provide adjustability on-site for fine tuning of balcony without levelling shims
- ✓ Bracket fabrication CE marked to BS EN 1090-1

Product Referencing System

STC16-150-320

Standard Product Reference

Bracket Projection (Dimension from concrete face to inside face of balcony)

Dimensions

STC16 Range

Faceplate

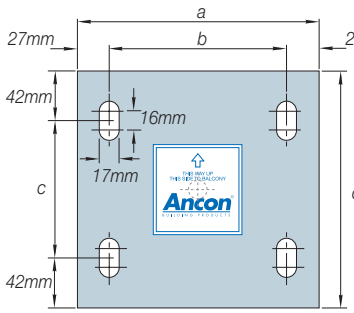

Cross Section of Connector

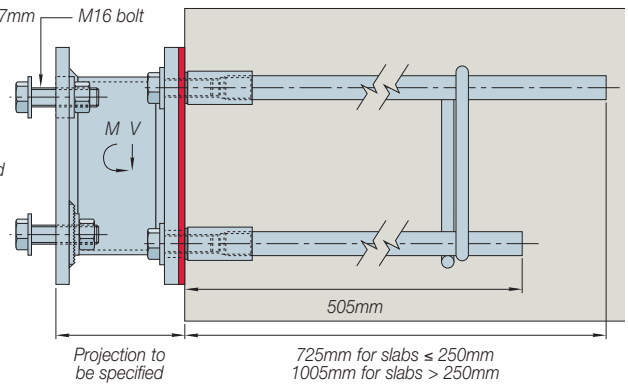

Nailing Plate

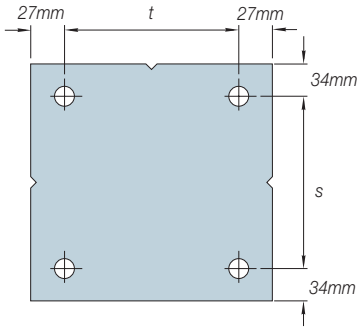

Product Reference	Width a	Fixing Centres b	Fixing Centres c	Height d	Anchorage Spacing s	Anchorage Spacing t
STC16-150	184	130	66	150	82	130
STC16-175	204	150	91	175	107	150
STC16-200	204	150	116	200	132	150
STC16-225	204	150	141	225	157	150

Dimensions shown for carbon steel brackets. Stainless steel dimensions are available in the SSTC Balcony Connector brochure.
Recommended fixing bolt clearance hole diameter in balcony steelwork is 17mm.

STC20-200

Faceplate

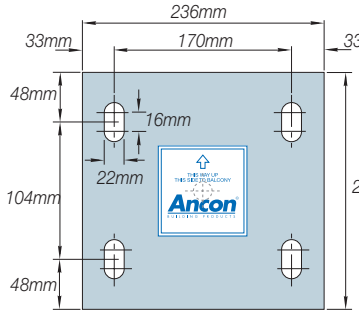

Cross Section of Connector

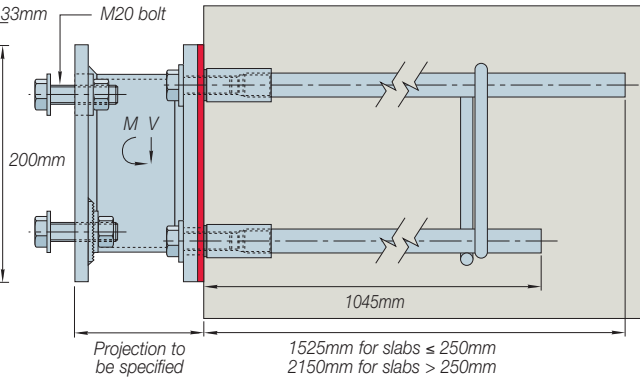

Nailing Plate

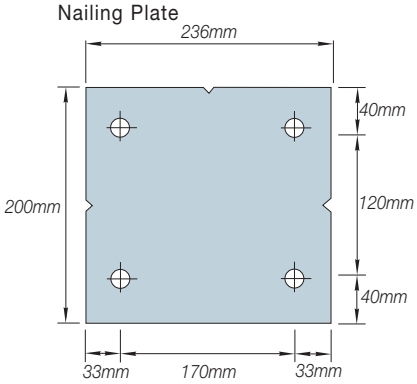

Recommended fixing bolt clearance hole diameter in balcony steelwork is 22mm.

STC24-240

Faceplate

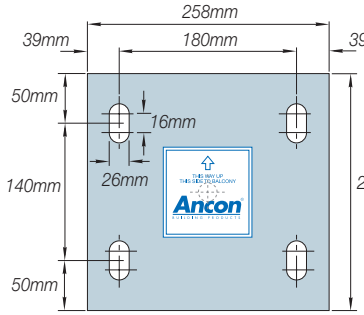

Cross Section of Connector

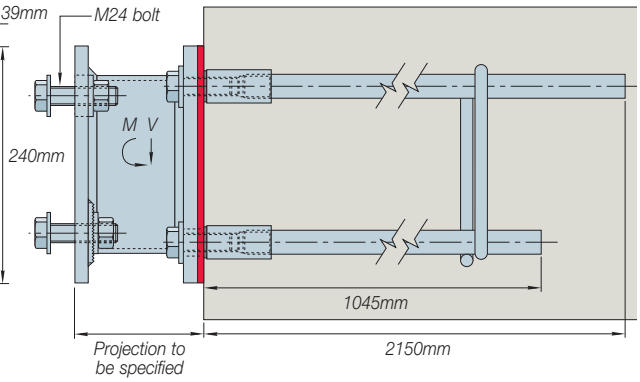

Nailing Plate

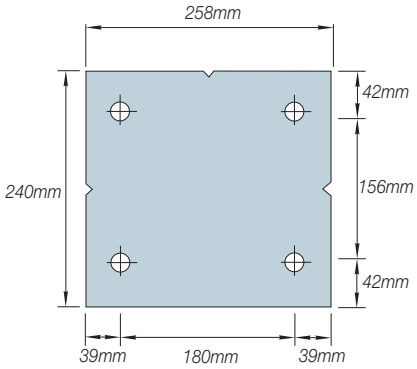

Recommended fixing bolt clearance hole diameter in balcony steelwork is 26mm.

M = Moment
V = Shear

Thermally Insulated Balcony Connectors

Design Resistances

The following tables may be used to select the appropriate standard system. They are based on a C32/40 concrete. For other concrete strengths, please contact Ancon.

Ancon's Technical Services Team can advise on STC system design and operate in-house design software to provide recommendations for specific project requirements.

STC16-150

Design Shear Resistance V_{Rd} (kN)	Minimum Connector Centres (mm)	Minimum Slab Edge Distance (mm)	Design Resistance for Bending M_{Rd} (kNm) 175mm slab	200mm slab	225mm slab	250mm slab	275mm slab	300mm slab	325mm slab
36.02	520 Centres	260	13.75	13.75	13.75	13.75	13.75	13.75	13.75
39.21	560 Centres	280	-	13.75	13.75	13.75	13.75	13.75	13.75
41.68	595 Centres	300	-	-	13.75	13.75	13.75	13.75	13.75
42.47			-	-	13.61	13.61	13.61	13.61	13.61
45.81	630 Centres	315	-	-	-	13.03	13.03	13.03	13.03
49.21	670 Centres	335	-	-	-	-	12.43	12.43	12.43
50.00	710 Centres	355	-	-	-	-	-	12.30	12.30
52.70			-	-	-	-	-	11.83	11.83
55.00	750 Centres	375	-	-	-	-	-	-	11.42
56.25			-	-	-	-	-	-	11.21

STC16-175

Design Shear Resistance V_{Rd} (kN)	Minimum Connector Centres (mm)	Minimum Slab Edge Distance (mm)	Design Resistance for Bending M_{Rd} (kNm) 200mm slab	225mm slab	250mm slab	275mm slab	300mm slab	325mm slab	350mm slab
42.09	615 Centres	310	18.13	18.13	18.13	18.13	18.13	18.13	18.13
43.91			17.70	17.70	17.70	17.70	17.70	17.70	17.70
45.00	650 Centres	325	-	17.45	17.45	17.45	17.45	17.45	17.45
47.27			-	16.93	16.93	16.93	16.93	16.93	16.93
50.00	690 Centres	345	-	-	16.30	16.30	16.30	16.30	16.30
50.70			-	-	16.14	16.14	16.14	16.14	16.14
54.20	730 Centres	365	-	-	-	15.33	15.33	15.33	15.33
55.00	765 Centres	385	-	-	-	-	15.14	15.14	15.14
57.77			-	-	-	-	14.50	14.50	14.50
60.00	800 Centres	400	-	-	-	-	-	13.99	13.99
61.40			-	-	-	-	-	13.66	13.66
65.10	840 Centres	420	-	-	-	-	-	-	12.81

STC16-200

Design Shear Resistance V_{Rd} (kN)	Minimum Connector Centres (mm)	Minimum Slab Edge Distance (mm)	Design Resistance for Bending M_{Rd} (kNm) 225mm slab	250mm slab	275mm slab	300mm slab	325mm slab	350mm slab	375mm slab
41.70	690 Centres	345	20.29	20.29	20.29	20.29	20.29	20.29	20.29
45.00			19.44	19.44	19.44	19.44	19.44	19.44	19.44
50.00			18.15	18.15	18.15	18.15	18.15	18.15	18.15
50.70			17.97	17.97	17.97	17.97	17.97	17.97	17.97
54.20	730 Centres	365	-	17.07	17.07	17.07	17.07	17.07	17.07
55.00	770 Centres	385	-	-	16.86	16.86	16.86	16.86	16.86
57.77			-	-	16.15	16.15	16.15	16.15	16.15
60.00	800 Centres	400	-	-	-	15.58	15.58	15.58	15.58
61.40			-	-	-	15.22	15.22	15.22	15.22
65.00	840 Centres	420	-	-	-	-	14.29	14.29	14.29
65.10			-	-	-	-	14.27	14.27	14.27
68.85	880 Centres	440	-	-	-	-	-	13.30	13.30
70.00	920 Centres	460	-	-	-	-	-	-	13.01
72.67			-	-	-	-	-	-	12.32

STC16-225

Design Shear Resistance V_{Rd} (kN)	Minimum Connector Centres (mm)	Minimum Slab Edge Distance (mm)	Design Resistance for Bending M_{Rd} (kNm) 250mm slab	275mm slab	300mm slab	325mm slab	350mm slab	375mm slab	400mm slab
41.70	765 Centres	385	22.36	22.36	22.36	22.36	22.36	22.36	22.36
45.00			21.42	21.42	21.42	21.42	21.42	21.42	21.42
50.00			20.00	20.00	20.00	20.00	20.00	20.00	20.00
55.00			18.59	18.59	18.59	18.59	18.59	18.59	18.59
57.77			17.82	17.82	17.82	17.82	17.82	17.82	17.82
60.00	800 Centres	400	-	17.17	17.17	17.17	17.17	17.17	17.17
61.40			-	16.77	16.77	16.77	16.77	16.77	16.77
65.00	845 Centres	425	-	-	15.75	15.75	15.75	15.75	15.75
65.10			-	-	15.72	15.72	15.72	15.72	15.72
68.85	875 Centres	440	-	-	-	14.66	14.66	14.66	14.66
70.00	915 Centres	460	-	-	-	-	14.33	14.33	14.33
72.66			-	-	-	-	13.58	13.58	13.58
75.00	950 Centres	475	-	-	-	-	-	12.92	12.92
76.53			-	-	-	-	-	12.48	12.48
80.00	990 Centres	495	-	-	-	-	-	-	11.50
80.46			-	-	-	-	-	-	11.37

See local reinforcement requirements on pages 26 to 28 and corner details on pages 29 and 30.
Tables refer to carbon steel brackets. Design resistances for stainless steel brackets are available in the SSTC Balcony Connector brochure.

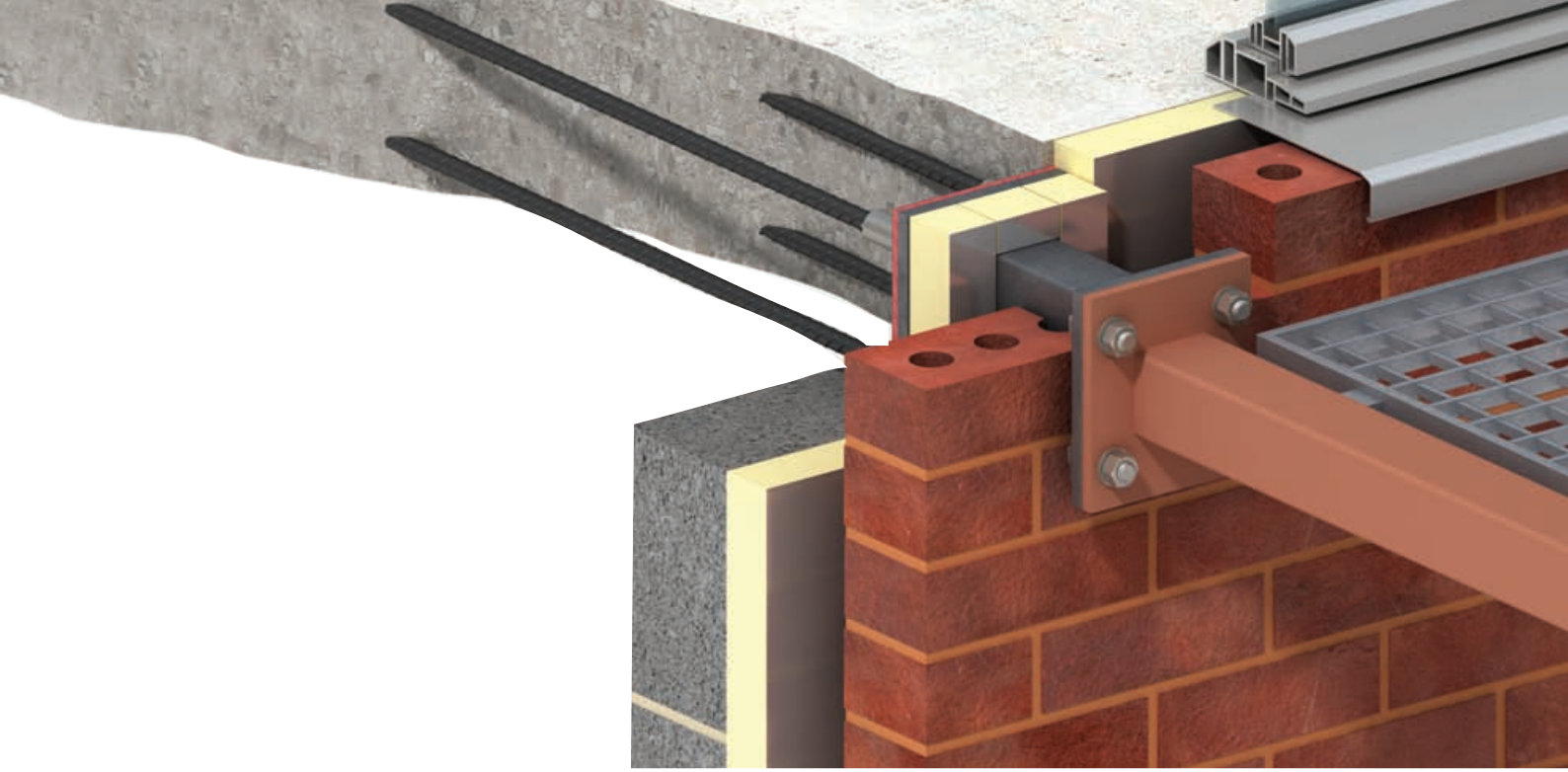

STC20-200

Design Shear Resistance V_{Rd} (kN)	Minimum Connector Centres (mm)	Minimum Slab Edge Distance (mm)	Design Resistance for Bending M_{Rd} (kNm) 225mm slab	250mm slab	275mm slab	300mm slab	325mm slab	350mm slab	375mm slab
53.78	690 Centres	345	32.86	32.86	32.86	32.86	32.86	32.86	32.86
55.00			32.56	32.56	32.56	32.56	32.56	32.56	32.56
55.98			32.32	32.32	32.32	32.32	32.32	32.32	32.32
59.68	730 Centres	365	-	31.41	31.41	31.41	31.41	31.41	31.41
60.00	770 Centres	385	-	-	31.34	31.34	31.34	31.34	31.34
63.45			-	-	30.49	30.49	30.49	30.49	30.49
65.00	800 Centres	400	-	-	-	30.11	30.11	30.11	30.11
67.27			-	-	-	29.56	29.56	29.56	29.56
70.00	840 Centres	420	-	-	-	-	28.89	28.89	28.89
71.18			-	-	-	-	28.60	28.60	28.60
75.00	880 Centres	440	-	-	-	-	-	27.67	27.67
75.14			-	-	-	-	-	27.63	27.63
79.16	920 Centres	460	-	-	-	-	-	-	26.65

STC24-240

Design Shear Resistance V_{Rd} (kN)	Minimum Connector Centres (mm)	Minimum Slab Edge Distance (mm)	Design Resistance for Bending M_{Rd} (kNm) 275mm slab	300mm slab	325mm slab	350mm slab	375mm slab	400mm slab	425mm slab
69.85	830 Centres	415	56.31	56.31	56.31	56.31	56.31	56.31	56.31
70.00	870 Centres	435	-	56.29	56.29	56.29	56.29	56.29	56.29
73.79			-	55.60	55.60	55.60	55.60	55.60	55.60
75.00	910 Centres	455	-	-	55.37	55.37	55.37	55.37	55.37
77.78			-	-	54.82	54.82	54.82	54.82	54.82
80.00	940 Centres	470	-	-	-	54.37	54.37	54.37	54.37
81.84			-	-	-	53.98	53.98	53.98	53.98
85.00	980 Centres	490	-	-	-	-	53.28	53.28	53.28
85.95			-	-	-	-	53.07	53.07	53.07
90.00	1020 Centres	510	-	-	-	-	-	52.11	52.11
90.12			-	-	-	-	-	52.08	52.08
94.35	1060 Centres	530	-	-	-	-	-	-	51.01

Design Example

Known requirements:

The Factored Ultimate Shear Force per connector, V_{Ed}, is 50kN.
The Factored Ultimate Moment per connector, M_{Ed}, is 18kNm.
The slab thickness is 275mm and the concrete grade is C32/40
The connector spacing is 750mm

From the tables:

✗ STC16-150 does not give the required capacities in a 275mm thick slab
✗ STC16-175 gives V_{Rd} = 50 kN and M_{Rd} = 16.30 kNm, so does not give the required capacity
✓ STC16-200 gives V_{Rd} = 50 kN, M_{Rd} = 18.15 kNm and minimum connector centres < 750mm
✗ STC16-225 gives V_{Rd} = 50 kN and M_{Rd} = 20.00 kNm and minimum connector centres > 750mm

See local reinforcement requirements on pages 26 to 28 and corner details on pages 29 and 30. Tables refer to carbon steel brackets. Design resistances for stainless steel brackets are available in the SSTC Balcony Connector brochure.

Thermally Insulated Balcony Connectors

Local Reinforcement

Local reinforcement is required around each STC connector to guarantee that the forces are transferred between the connector and the concrete. Correct detailing in accordance with appropriate design codes and the recommendations provided here will ensure Ancon STC Connectors attain their full capacity. The tables show proposals for the type and spacing of U-Bars each side of the connector together with details of reinforcement above and below the connectors.

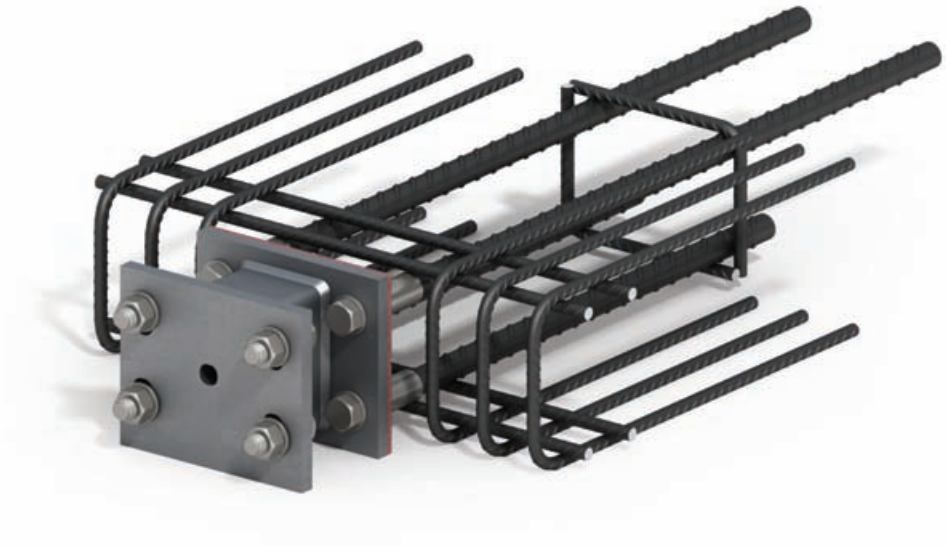

Minimum Slab Depths for a Straight Run

Connector Reference	Minimum Slab Depth (mm) Type 1 Reinforcement	Type 2 Reinforcement
STC16-150	200	175
STC16-175	225	200
STC16-200	250	225
STC16-225	275	250
STC20-200	250	225
STC24-240	300	275

Type 1

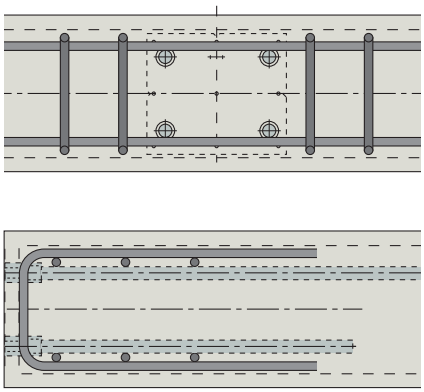

Type 2

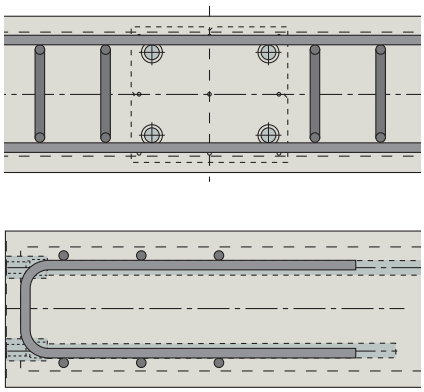

Notes:

Tables on pages 27 - 28 based on the following assumptions;
Grade C32/40 Concrete
Connectors assumed to be at mid depth of slab.
The maximum moment for each connector type is assumed.
Reinforcement is based on a minimum concrete cover of 25mm
Mandrel diameter for the U bars is assumed to conform to the figures given in Table 8.1N of BS EN 1992-1-1:2004
It is assumed that the U bars and the longitudinal bars are of the same diameter.
Length of longitudinal bars should be a minimum of the connector spacing + a lap length, determined in accordance with BS EN 1992-1

Spacing of U-Bar Reinforcement

Values given in adjacent table assume:-
Cover, c_{nom} = 25mm
Concrete grade C32/40
Reinforcement diameter 12mm (u-bar and longitudinal bars)
Reinforcement arrangement type 1

U-Bar Spacing

	e_1 (mm)	e_2 (mm)
STC16-150	60	80
STC16-175	60	85
STC16-200	50	85
STC16-225	50	85
STC20-200	50	70
STC24-240	50	70

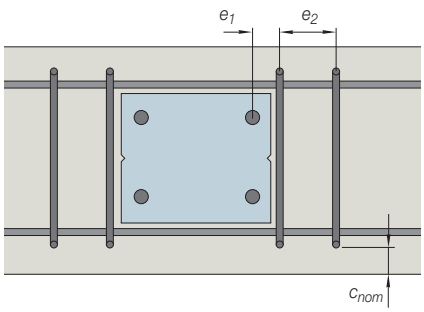

U-Bars

STC16-150 — U-Bar requirements for different diameter bars

	H10 Bars			H12 Bars			H16 Bars		
Slab Depth (mm)	Number of U-Bars Each Side of Connector	Min U-Bar Leg Length (mm)	Reinforcement Configuration	Number of U-Bars Each Side of Connector	Min U-Bar Leg Length (mm)	Reinforcement Configuration	Number of U-Bars Each Side of Connector	Min U-Bar Leg Length (mm)	Reinforcement Configuration
175	2	615	Type 2	2	705	Type 2	1	875	Type 2
200	2	700	Type 1	2	770	Type 1	1	930	Type 2
225	2	745	Type 1	2	825	Type 1	1	985	Type 1
250	2	920	Type 1	2	1030	Type 1	1	1260	Type 1
275	2	975	Type 1	2	1085	Type 1	1	1305	Type 1
300	2	1020	Type 1	2	1130	Type 1	1	1360	Type 1
325	2	1075	Type 1	2	1185	Type 1	1	1405	Type 1

STC16-175 — U-Bar requirements for different diameter bars

	H10 Bars			H12 Bars			H16 Bars		
Slab Depth (mm)	Number of U-Bars Each Side of Connector	Min U-Bar Leg Length (mm)	Reinforcement Configuration	Number of U-Bars Each Side of Connector	Min U-Bar Leg Length (mm)	Reinforcement Configuration	Number of U-Bars Each Side of Connector	Min U-Bar Leg Length (mm)	Reinforcement Configuration
200	2	660	Type 2	2	760	Type 2	1	930	Type 2
225	2	745	Type 1	2	825	Type 1	1	975	Type 2
250	2	920	Type 1	2	1030	Type 1	1	1260	Type 1
275	2	975	Type 1	2	1085	Type 1	1	1305	Type 1
300	2	1020	Type 1	2	1130	Type 1	1	1360	Type 1
325	2	1075	Type 1	2	1185	Type 1	1	1405	Type 1
350	2	1120	Type 1	2	1230	Type 1	1	1460	Type 1

STC16-200 — U-Bar requirements for different diameter bars

	H10 Bars			H12 Bars			H16 Bars		
Slab Depth (mm)	Number of U-Bars Each Side of Connector	Min U-Bar Leg Length (mm)	Reinforcement Configuration	Number of U-Bars Each Side of Connector	Min U-Bar Leg Length (mm)	Reinforcement Configuration	Number of U-Bars Each Side of Connector	Min U-Bar Leg Length (mm)	Reinforcement Configuration
225	2	715	Type 2	2	805	Type 2	1	975	Type 2
250	2	920	Type 1	2	1030	Type 1	1	1250	Type 2
275	2	975	Type 1	2	1085	Type 1	1	1305	Type 1
300	2	1020	Type 1	2	1130	Type 1	1	1360	Type 1
325	2	1075	Type 1	2	1185	Type 1	1	1405	Type 1
350	2	1120	Type 1	2	1230	Type 1	1	1460	Type 1
375	2	1175	Type 1	2	1285	Type 1	1	1505	Type 1

STC16-225 — U-Bar requirements for different diameter bars

	H10 Bars			H12 Bars			H16 Bars		
Slab Depth (mm)	Number of U-Bars Each Side of Connector	Min U-Bar Leg Length (mm)	Reinforcement Configuration	Number of U-Bars Each Side of Connector	Min U-Bar Leg Length (mm)	Reinforcement Configuration	Number of U-Bars Each Side of Connector	Min U-Bar Leg Length (mm)	Reinforcement Configuration
250	2	870	Type 2	2	1000	Type 2	1	1250	Type 2
275	2	975	Type 1	2	1085	Type 1	1	1305	Type 2
300	2	1020	Type 1	2	1130	Type 1	1	1360	Type 1
325	2	1075	Type 1	2	1185	Type 1	1	1405	Type 1
350	2	1120	Type 1	2	1230	Type 1	1	1460	Type 1
375	2	1175	Type 1	2	1285	Type 1	1	1505	Type 1
400	2	1220	Type 1	2	1330	Type 1	1	1560	Type 1

STC20-200 — U-Bar requirements for different diameter bars

	H10 Bars			H12 Bars			H16 Bars		
Slab Depth (mm)	Number of U-Bars Each Side of Connector	Min U-Bar Leg Length (mm)	Reinforcement Configuration	Number of U-Bars Each Side of Connector	Min U-Bar Leg Length (mm)	Reinforcement Configuration	Number of U-Bars Each Side of Connector	Min U-Bar Leg Length (mm)	Reinforcement Configuration
225	3	715	Type 2	2	805	Type 2	2	975	Type 2
250	3	920	Type 1	2	1030	Type 1	2	1250	Type 2
275	3	975	Type 1	2	1085	Type 1	2	1305	Type 2
300	3	1020	Type 1	2	1130	Type 1	1	1360	Type 1
325	3	1075	Type 1	2	1185	Type 1	1	1405	Type 1
350	3	1120	Type 1	2	1230	Type 1	1	1460	Type 1
375	3	1175	Type 1	2	1285	Type 1	1	1505	Type 1

STC24-240 — U-Bar requirements for different diameter bars

	H10 Bars			H12 Bars			H16 Bars		
Slab Depth (mm)	Number of U-Bars Each Side of Connector	Min U-Bar Leg Length (mm)	Reinforcement Configuration	Number of U-Bars Each Side of Connector	Min U-Bar Leg Length (mm)	Reinforcement Configuration	Number of U-Bars Each Side of Connector	Min U-Bar Leg Length (mm)	Reinforcement Configuration
275	3	970	Type 2	2	970	Type 2	2	1230	Type 2
300	3	1020	Type 1	2	1130	Type 1	2	1360	Type 2
325	3	1070	Type 1	2	1180	Type 1	2	1410	Type 1
350	3	1120	Type 1	2	1230	Type 1	2	1460	Type 1
375	3	1170	Type 1	2	1280	Type 1	2	1510	Type 1
400	3	1220	Type 1	2	1330	Type 1	2	1560	Type 1
425	3	1280	Type 1	2	1380	Type 1	2	1610	Type 1

Thermally Insulated Balcony Connectors

Longitudinal bars

STC16-150 — Number of Longitudinal bars required in the top and bottom of the slab, for various connector centres

	H10 Bars						H12 Bars						H16 Bars
Slab Depth (mm)	600 mm	800 mm	1000 mm	1200 mm	1500 mm	2000 mm	600 mm	800 mm	1000 mm	1200 mm	1500 mm	2000 mm	600 - 2000 mm
175	2	2	2	2	2	2	2	2	2	2	2	2	2
200	2	2	2	2	2	2	2	2	2	2	2	2	2
225	2	2	2	2	2	2	2	2	2	2	2	2	2
250	2	2	2	2	2	2	2	2	2	2	2	2	2
275	2	2	2	2	2	2	2	2	2	2	2	2	2
300	2	2	2	3	3	3	2	2	2	2	2	2	2
325	3	3	3	3	3	3	2	2	2	2	2	2	2

STC16-175 — Number of Longitudinal bars required in the top and bottom of the slab, for various connector centres

	H10 Bars						H12 Bars						H16 Bars
Slab Depth (mm)	600 mm	800 mm	1000 mm	1200 mm	1500 mm	2000 mm	600 mm	800 mm	1000 mm	1200 mm	1500 mm	2000 mm	600 - 2000 mm
200	2	2	2	2	2	2	2	2	2	2	2	2	2
225	2	2	2	2	2	2	2	2	2	2	2	2	2
250	2	2	2	2	2	2	2	2	2	2	2	2	2
275	2	2	2	2	2	2	2	2	2	2	2	2	2
300	2	2	2	2	2	2	2	2	2	2	2	2	2
325	3	3	3	3	3	3	2	2	2	2	2	2	2
350	3	3	3	3	3	3	2	2	2	2	2	3	2

STC16-200 — Number of Longitudinal bars required in the top and bottom of the slab, for various connector centres

	H10 Bars						H12 Bars						H16 Bars
Slab Depth (mm)	600 mm	800 mm	1000 mm	1200 mm	1500 mm	2000 mm	600 mm	800 mm	1000 mm	1200 mm	1500 mm	2000 mm	600 - 2000 mm
225	2	2	2	2	2	2	2	2	2	2	2	2	2
250	2	2	2	2	2	2	2	2	2	2	2	2	2
275	2	2	2	2	2	2	2	2	2	2	2	2	2
300	2	2	2	3	3	3	2	2	2	2	2	2	2
325	3	3	3	3	3	3	2	2	2	2	2	2	2
350	3	3	3	3	3	3	2	2	2	2	2	3	2
375	3	3	3	3	3	3	2	3	3	3	3	3	2

STC16-225 — Number of Longitudinal bars required in the top and bottom of the slab, for various connector centres

	H10 Bars						H12 Bars						H16 Bars
Slab Depth (mm)	600 mm	800 mm	1000 mm	1200 mm	1500 mm	2000 mm	600 mm	800 mm	1000 mm	1200 mm	1500 mm	2000 mm	600 - 2000 mm
250	2	2	2	2	2	2	2	2	2	2	2	2	2
275	2	2	2	2	2	2	2	2	2	2	2	2	2
300	2	2	2	3	3	3	2	2	2	2	2	2	2
325	3	3	3	3	3	3	2	2	2	2	2	2	2
350	3	3	3	3	3	4	2	2	2	2	2	3	2
375	3	3	4	4	4	4	2	3	3	3	3	3	2
400	4	4	4	4	4	4	3	3	3	3	3	3	2

STC20-200 — Number of Longitudinal bars required in the top and bottom of the slab, for various connector centres

	H10 Bars						H12 Bars						H16 Bars
Slab Depth (mm)	600 mm	800 mm	1000 mm	1200 mm	1500 mm	2000 mm	600 mm	800 mm	1000 mm	1200 mm	1500 mm	2000 mm	600-2000 mm
225	2	2	2	2	2	2	2	2	2	2	2	2	2
250	2	2	2	2	2	2	2	2	2	2	2	2	2
275	2	2	2	2	2	2	2	2	2	2	2	2	2
300	2	2	2	2	3	3	2	2	2	2	2	2	2
325	3	3	3	3	3	3	2	2	2	2	2	2	2
350	3	3	3	3	3	4	2	2	2	2	2	3	2
375	3	3	3	4	4	4	2	2	3	3	3	3	2

STC24-240 — Number of Longitudinal bars required in the top and bottom of the slab, for various connector centres

	H10 Bars						H12 Bars						H16 Bars
Slab Depth (mm)	600 mm	800 mm	1000 mm	1200 mm	1500 mm	2000 mm	600 mm	800 mm	1000 mm	1200 mm	1500 mm	2000 mm	600-2000 mm
275	2	2	2	2	2	2	2	2	2	2	2	2	2
300	2	2	2	2	3	3	2	2	2	2	2	2	2
325	3	3	3	3	3	3	2	2	2	2	2	2	2
350	3	3	3	3	3	4	2	2	2	2	2	3	2
375	3	3	3	4	4	4	2	2	3	3	3	3	2
400	4	4	4	4	4	4	3	3	3	3	3	3	2
425	4	4	4	4	4	4	3	3	3	3	3	3	2

Corner Details

Standard STC corner units are available which offset the position of the anchor bars on adjacent connectors to eliminate a reinforcement clash.

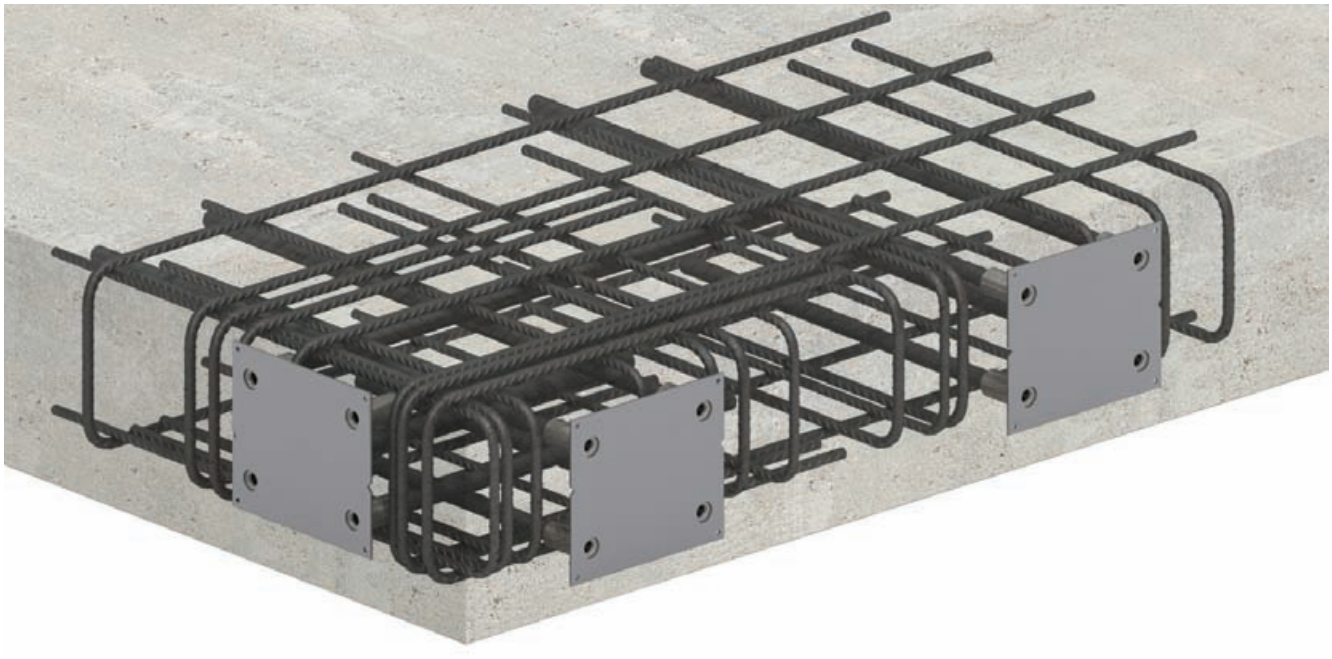

The corresponding bracket assemblies feature an extended fixing plate on one side to bring the balcony fixing position back in line with the standard STC connectors used in the rest of the slab.

Due to the offset, the minimum slab depth for these corner units is deeper than that for a straight run and is given in the table. The offset also affects the unit performance. The six graphs on page 30 show the moment and shear resistance for each STC corner unit in relation to the distance from the corner and also when the loads become the same as for the standard connector.

The side notches in an STC nailplate are used to indicate the fixing line, normally the centreline of the slab. On STC corner units, these notches are offset to create the difference in fixing height at the corner.

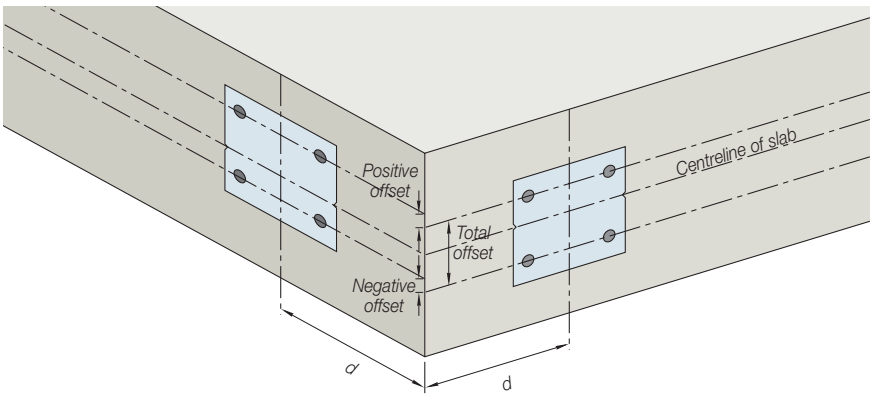

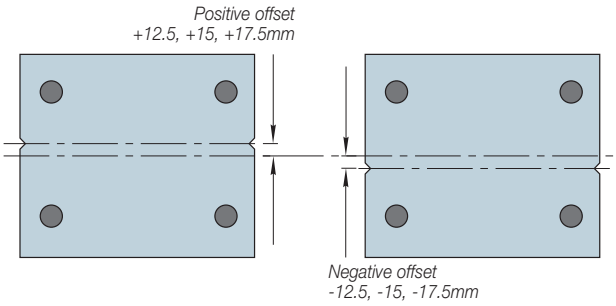

Minimum Slab Depths at Corners

Connector Reference	Minimum Slab Depth (mm)
STC16-150	225
STC16-175	250
STC16-200	275
STC16-225	300
STC20-200	275
STC24-240	325

Corner Unit Offsets

Connector	Offset per Corner Connector (mm)	Total System Offset (mm)
STC16	+/- 12.5	25
STC20	+/- 15.0	30
STC24	+/- 17.5	35

Thermally Insulated Balcony Connectors

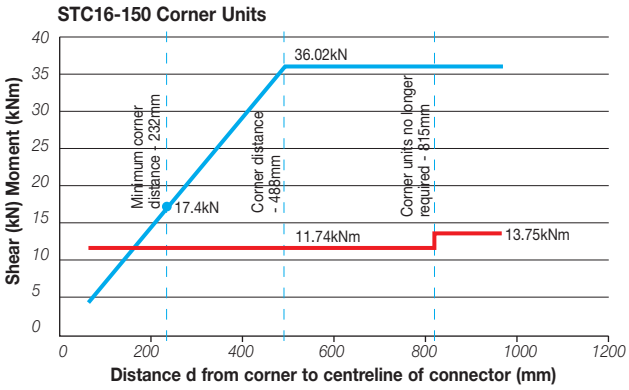

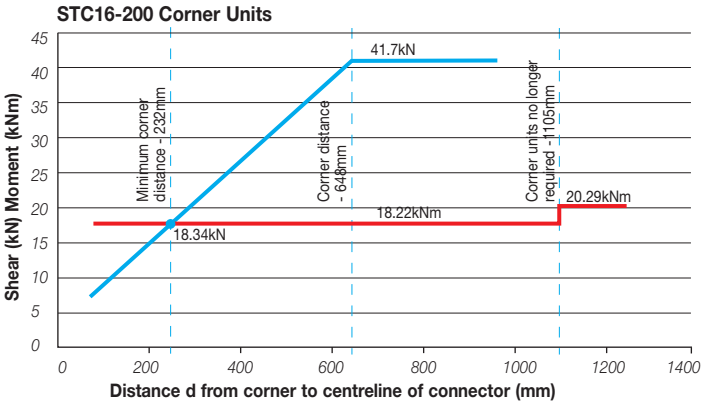

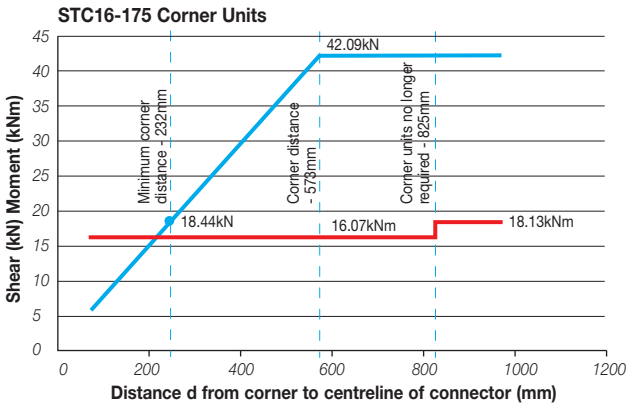

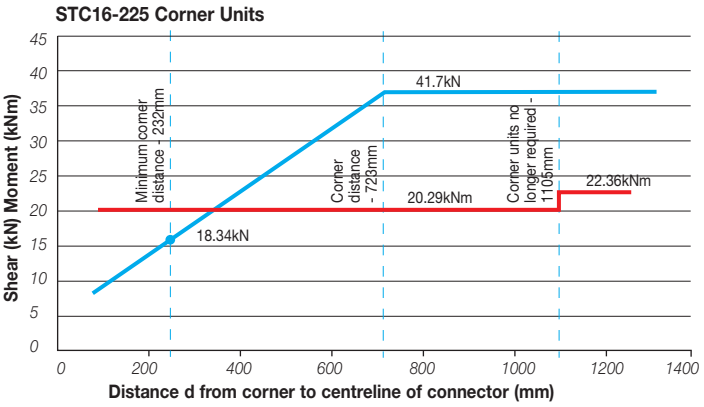

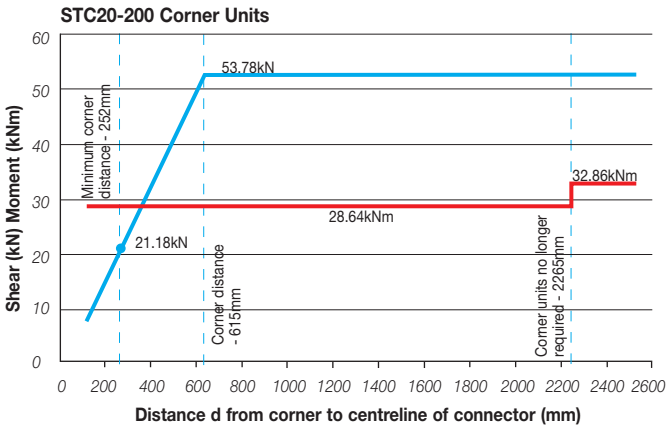

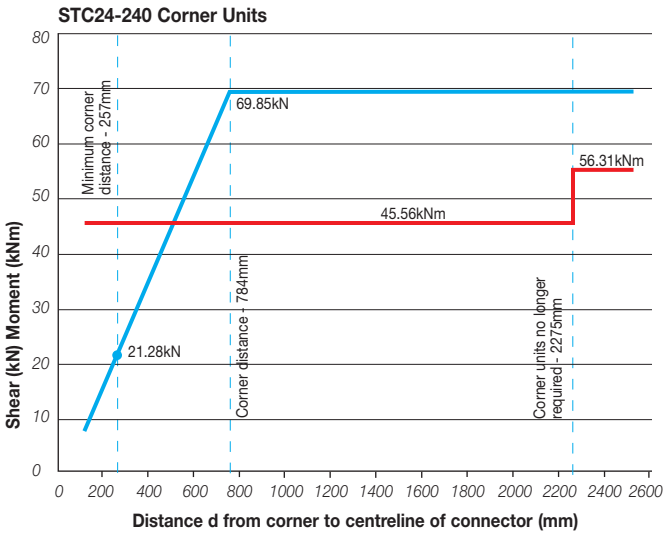

Min V_{Rd} (kN)
Max M_{Rd} (kNm)

Installation

Ancon STC balcony connectors are quick and easy to install. Installation is a two phase process.

The STC system consists of two components; a cast-in anchorage and a fabricated bracket with thermoset thermal plate.

Cast-in Anchorage

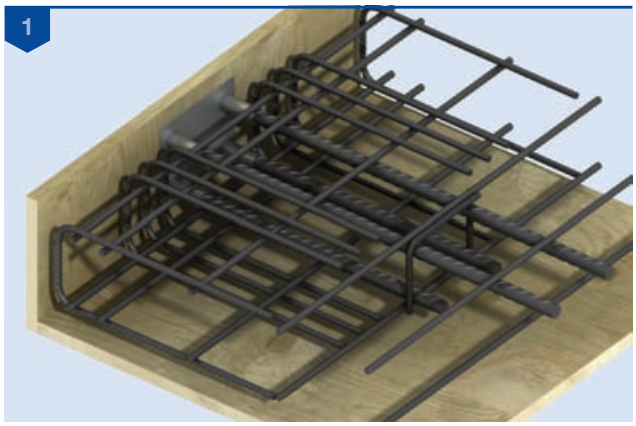

Nail the assembly to the formwork. The end of the reinforcement cage should be supported on spacers or tied to adjacent slab reinforcement.

Fix secondary reinforcement and cast concrete.

Allow to cure and strike formwork.

Bracket/Thermal Plate Section

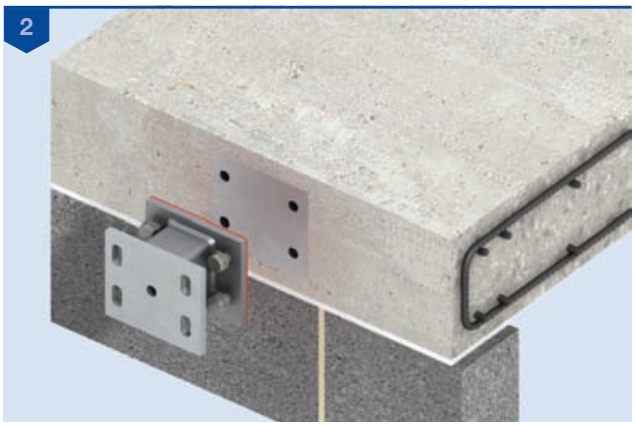

Remove plastic plugs from couplers, offer up thermal plate and then fabricated bracket. The labels on the connector identify the balcony and concrete slab side, as well as the orientation of the connector.

Install the four stainless steel setscrews and washers and hand tighten.

Tighten to the correct torque using a calibrated torque wrench. The thermal plate is now sandwiched between the bracket and the concrete.

Connector	Stainless Steel Setscrew	Tightening Torque
STC16	M16, Length 40mm	170Nm
STC20	M20, Length 50mm	305Nm
STC24	M24, Length 60mm	530Nm

Balcony

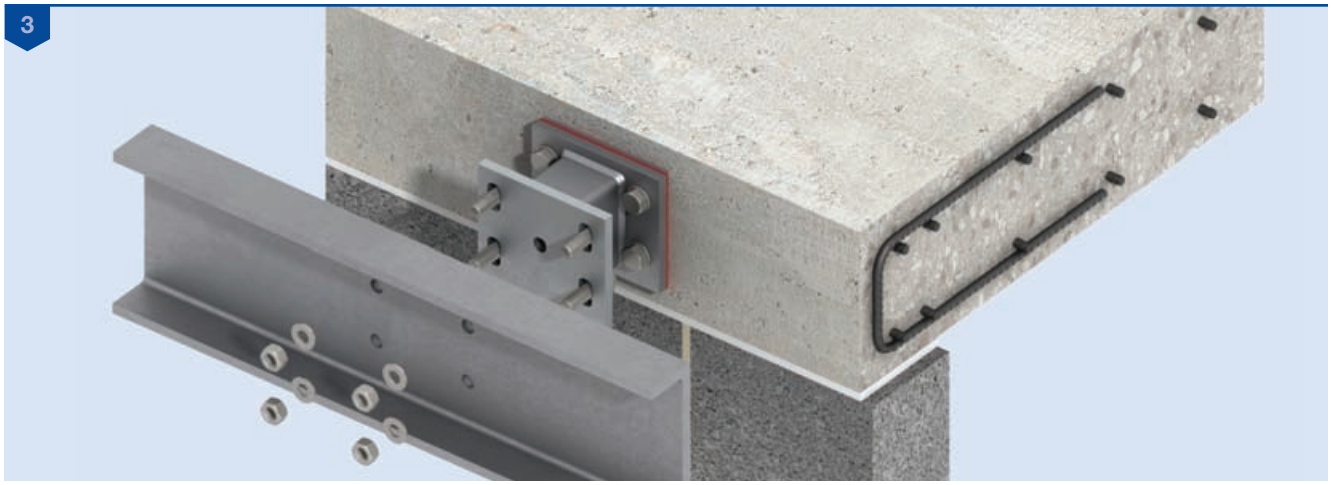

Offer up the steel balcony and connect to the STC bracket with the four galvanised hex head setscrews as follows:

- The top bolts must have the two galvanised square plate washers over the plain slots in the STC connector
- The bottom bolts must have the two galvanised serrated washers over the serrated slots in the STC connector, orientated to mate and not turned at an angle or installed using the plain side
- Four galvanised washers are provided for the balcony side of the connection, however if the balcony is slotted a plate washer should be used
- The balcony can be levelled vertically using the adjustment provided by the vertical slots in the connector.
- Should minor adjustments to the angle of the balcony be required, for example due to the concrete face being out of plumb, then shims should be installed between the balcony and the connector at this stage. Shims are available from Ancon and must not exceed 10mm thickness.
- Adjustment must not be made between the connector and the thermal break or between the thermal break and the concrete slab edge.
- Hand tighten the four connection bolts and then torque using a calibrated torque wrench.

Connector	Galvanised Hex Head Setscrew	Tightening Torque
STC16	M16, Length 60mm	170Nm
STC20	M20, Length 75mm	325Nm
STC24	M24, Length 90mm	565Nm

Thermally Insulated Balcony Connectors

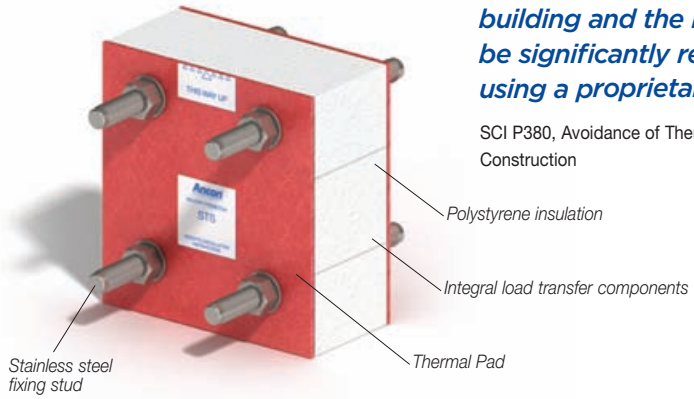

"For structure supported balconies, the heat losses at the thermal bridge between the structural frame of the building and the balcony can be significantly reduced by using a proprietary product."

SCI P380, Avoidance of Thermal Bridging in Steel Construction

Ancon STS

The STS system is a compact thermal break, typically used for connecting steel balconies to structural steel frames but is equally suitable for other steel-to-steel applications. It is available in three standard stud sizes to accommodate a wide range of loads. Manufactured to order, the vertical centres of the fixing studs can be specified to suit the exact requirements of the application. Thermal modelling of a typical STS application showed a reduction in heat loss of almost 50% compared to a direct steel connection. It also illustrated a temperature factor within the limits detailed in BRE document IP1/06 for eliminating condensation risks in buildings of any type, even those with high humidity (0.9).

The STS connector comprises tension and compression components within a single combined and compact unit, wrapped in polystyrene insulation. It features four A4 stainless steel fixing studs and a thermoset plate is located at each steel interface. The fabricated compression component is supplied in hot dipped galvanised steel as standard and can be supplied in stainless steel (SSTS) on request.

STS connectors are designed to EN 1993 (Eurocode 3) and CE marked to BS EN 1090 Part 1.

System Benefits

- ✓ Thermal plates at each steel interface
- ✓ Proven through thermal modelling to reduce heat loss and eliminate condensation risk
- ✓ Typically reduces heat loss by 50%, compared to direct steel connections
- ✓ Bracket fabrication CE marked to BS EN 1090-1
- ✓ Variable fixing heights to suit application
- ✓ A4-grade stainless steel fixings for enhanced corrosion protection

STS System Dimensions

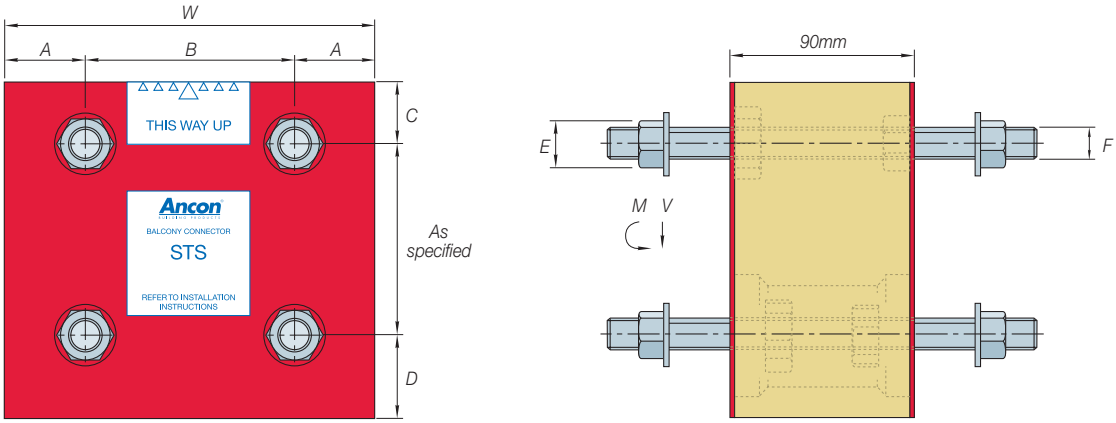

Product Reference	W	A	B	C	D	E	F
STS 16	180	40	100	30	40	24 A/F	M16
STS 20	180	40	100	30	40	30 A/F	M20
STS 24	190	37.5	115	40	45	36 A/F	M24

M = Moment
V = Shear

Product Referencing System

STS 16-140

Standard Product Reference — Vertical Bolt Centres Required

Design Resistances

STS16

Vertical Bolt Centres	Design Shear Resistance V_{Rd} (kN)	Design Resistance for Bending M_{Rd} (kNm)	Design Resistance for Tension N_{Rd} (kN)
70mm	85.7	12.66	180.9
75mm		13.56	
100mm		18.08	
125mm		22.60	
150mm		27.12	
175mm		31.65	
200mm		36.17	
225mm		40.69	
250mm		45.21	
275mm		49.73	
300mm		54.25	
325mm		58.78	
350mm		63.30	

STS20

Vertical Bolt Centres	Design Shear Resistance V_{Rd} (kN)	Design Resistance for Bending M_{Rd} (kNm)	Design Resistance for Tension N_{Rd} (kN)
70mm	85.7	19.75	282.2
75mm		21.16	
100mm		28.22	
125mm		35.28	
150mm		42.33	
175mm		49.39	
200mm		56.44	
225mm		63.50	
250mm		70.55	
275mm		77.61	
300mm		84.66	
325mm		91.72	
350mm		98.77	

STS24

Vertical Bolt Centres	Design Shear Resistance V_{Rd} (kN)	Design Resistance for Bending M_{Rd} (kNm)	Design Resistance for Tension N_{Rd} (kN)
85mm	87.6	34.56	406.0
100mm		40.66	
125mm		50.82	
150mm		60.99	
175mm		71.15	
200mm		81.32	
225mm		91.49	
250mm		101.65	
275mm		111.82	
300mm		121.99	
325mm		132.15	
350mm		142.32	

Note: *Design resistances stated show combined shear and tension.*

Design Example

Known requirements:

The Factored Ultimate Shear Force per connector, V_{Ed}, is 75kN.

The Factored Ultimate Moment per connector, M_{Ed}, is 45kNm.

Vertical bolt centres are limited to a maximum of 150mm

From the tables:

✗ STS16 at 150mm centres gives V_{Rd} = 85.7kN and M_{Rd} = 27.12kNm
✗ STS20 at 150mm centres gives V_{Rd} = 85.7kN and M_{Rd} = 42.33kNm
} These connectors do not give the required capacity

✓ STS24 at 150mm centres gives V_{Rd} = 87.6kN and M_{Rd} = 60.99kNm. This connector meets the project requirements

Thermally Insulated Balcony Connectors

Installation

The STS Balcony Connector is supplied in a single unit with thermal plates attached to both inner and outer faces. These plates should not be removed. The assembly features all necessary nuts and washers. Care should be taken to avoid damaging any balcony connector components prior to and during installation.

It is essential that the connector is orientated and installed correctly.

Pre-installation Checks

Prior to installation of the connector, it is important to check the product dimensions against the engineer's drawings, specifically ensuring the mating parts match the connector stud centres.

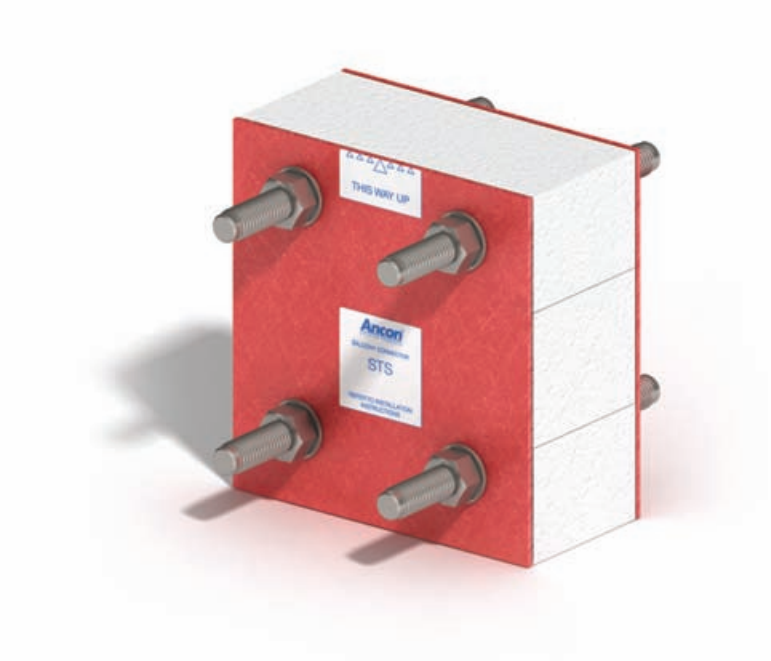

Installation

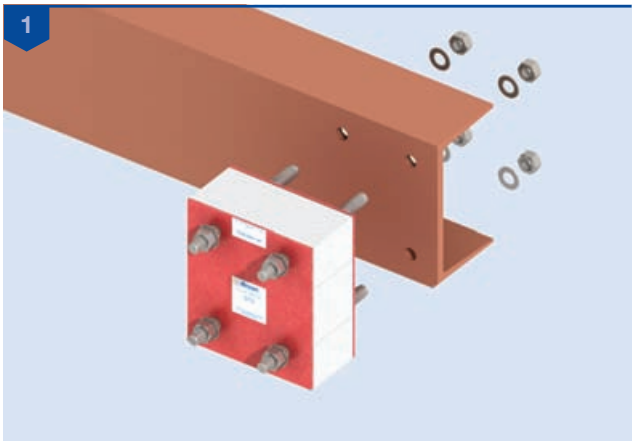

The STS Balcony Connector should be orientated so that the label indicating the uppermost face is correctly positioned and is facing out of the building.

Position the connector close to where it is to be installed. Ensure the connector is stable and not likely to fall. Carefully remove the nuts and washers from the studs on the inner face. Keep the nuts and washers close to hand. Carefully lift and fit the exposed studs through the appropriate holes in the building structure. Do not force the connector into position. Re-fit the washers and nuts.

Once the connector is fully aligned with the structure, torque up the nuts with a calibrated torque wrench and suitable socket.

	STS 16	STS 20	STS 24
Wrench Size (A/F)	24	30	36
Torque (Nm)	148	288	498

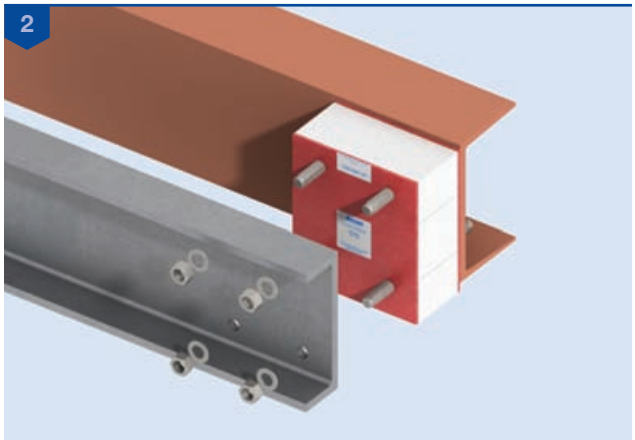

Once all connectors are correctly positioned and fitted to the building structure, the balcony beams can be installed.

Remove the nuts and washers from the outer face of the connector and keep close to hand.

Carefully lift the balcony fabrication, ensuring the balcony is horizontal. Align the balcony and carefully push over the exposed studs. Do not force it into position.

When positioned, re-fit the washers and nuts.

Once the balcony is fully aligned with the connector and structure, tighten the nuts to the correct torque. Remove all lifting straps.

Scan the code to watch an installation video.

Other Ancon Products

Wall Ties and Restraint Fixings

Wall Ties are an essential element in the strength and stability of a cavity wall, however, by crossing the insulated cavity they act as a thermal bridge between the internal and external leaves. Ancon manufactures a range of low thermal conductivity wall ties to minimise the effects of thermal bridging. The Ancon range offers reduced heat transmittance whilst continuing to meet the structural performance requirements of multi-storey and wide cavity construction. Products include slender CE-marked Staifix stainless steel wire ties and BBA-approved Teplo wall ties manufactured from basalt fibres with a thermal conductivity of just 0.7WmK.

Masonry Support Systems

Masonry cladding on concrete or steel frames is normally supported from stainless steel support systems. The standard AnconOptima system and the bespoke Ancon MDC System create a continuous angle to support the outer leaf of masonry. Solutions are available to support special masonry features such as curves, arches and soffits.

Ancon support brackets can now be supplied with a thermal break to minimise heat loss through cold bridging at the interface with the structure. The standard thermal break is shaped like a key-hole shim to allow it to be located quickly on site.

Tension Systems

Tie bars are increasingly being used in structures and buildings as an architectural as well as a structural element. Ancon Tension Systems comprise a range of components which can be supplied in carbon steel or stainless steel in a variety of sizes and finishes. A variety of assemblies can be created from simple tie bars to complex bracing systems involving several bars joined at one point.

Shear Load Connectors

Ancon DSD and ESD Shear Load Connectors are used to transfer shear across expansion and contraction joints in concrete. They are more effective at transferring load and allowing movement to take place than standard dowels. The range features rectangular box section sleeves to allow lateral movement in addition to longitudinal movement. A range of Lockable Dowels is available for temporary movement joints in post-tensioned concrete.

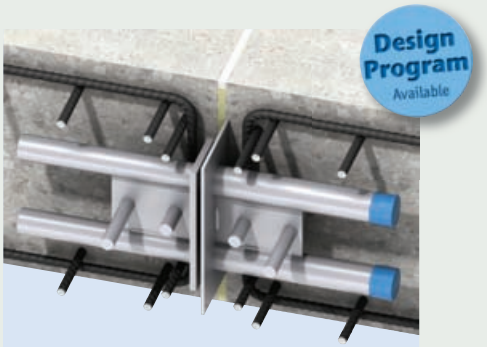

Punching Shear Reinforcement

Used within a slab to provide additional reinforcement around columns, Ancon Shearfix is the ideal solution to the design and construction problems associated with punching shear including enlarged column heads. The system consists of double-headed studs welded to flat rails, positioned around the column head or base.

For BIM objects of the above products visit www.ancon.co.uk or www.NationalBIMLibrary.com/Ancon

Masonry Support Systems
Lintels
Masonry Reinforcement
Wall Ties and Restraint Fixings
Channel and Bolt Fixings
Tension and Compression Systems
Insulated Balcony Connectors
Shear Load Connectors
Punching Shear Reinforcement
Reinforcing Bar Couplers
Reinforcement Continuity Systems
Stainless Steel Fabrications
Flooring and Formed Sections
Refractory Fixings

THE QUEEN'S AWARDS FOR ENTERPRISE: INNOVATION 2012

THE QUEEN'S AWARDS FOR ENTERPRISE: INTERNATIONAL TRADE 2015

Ancon®
BUILDING PRODUCTS

Ancon Building Products
President Way, President Park
Sheffield S4 7UR
United Kingdom
Tel: +44 (0) 114 275 5224
Fax: +44 (0) 114 276 8543
Email: info@ancon.co.uk
Visit: www.ancon.co.uk
Follow on Twitter: @AnconUK

Ancon Building Products
98 Kurrajong Avenue
Mount Druitt
Sydney NSW 2770
Australia
Tel: +61 (0) 2 8808 3100
Fax: +61 (0) 2 9675 3390
Email: info@ancon.com.au
Visit: www.ancon.com.au

Ancon (Schweiz) AG
Gewerbezone Widalmi 10
3216 Ried bei Kerzers
Switzerland
Tel: +41 (0) 31 750 3030
Fax: +41 (0) 31 750 3033
Email: info@ancon.ch
Visit: www.ancon.ch

Ancon GmbH
Bartholomäusstrasse 26
90489 Nuremberg
Germany
Tel: +49 (0) 911 955 1234 0
Fax: +49 (0) 911 955 1234 9
Email: info@anconbp.de
Visit: www.anconbp.de

Ancon (Middle East) FZE
PO Box 17225
Jebel Ali
Dubai
United Arab Emirates
Tel: +971 (0) 4 883 4346
Fax: +971 (0) 4 883 4347
Email: info@ancon.ae
Visit: www.ancon.ae

Ancon Building Products
2/19 Nuttall Drive
Hillsborough
Christchurch 8022
New Zealand
Tel: +64 (0) 3 376 5205
Fax: +64 (0) 3 376 5206
Email: info@ancon.co.nz
Visit: www.ancon.co.nz

Ancon Building Products GesmbH
Puchgasse 1
A-1220 Vienna
Austria
Tel: +43 (0) 1 259 58 62-0
Fax: +43 (0) 1 259 58 62-40
Email: info@ancon.at
Visit: www.ancon.at

These products are available from:

© Ancon Building Products

The construction applications and details provided in this literature are indicative only. In every case, project working details should be entrusted to appropriately qualified and experienced persons.

Whilst every care has been exercised in the preparation of this document to ensure that any advice, recommendations or information is accurate, no liability or responsibility of any kind is accepted in respect of Ancon Building Products.

With a policy of continuous product development Ancon Building Products reserves the right to modify product design and specification without due notice.

bsi. ISO 9001 Quality Management

bsi. ISO 14001 Environmental Management

bsi. OHSAS 18001 Occupational Health and Safety Management